MINTEK

REPORT

No. M304

THE SMELTING OF ILMENITE IN A d.c. TRANSFERRED-ARC PLASMA FURNACE WITH A MOLTEN-ANODE CONFIGURATION

by

A.D. Brent

15th July, 1987

COUNCIL FOR MINERAL TECHNOLOGY
200 Hans Strijdom Road
RANDBURG
South Africa

MINTEK

(PYROMETALLURGY DIVISION)

REPORT
No. M304

THE SMELTING OF ILMENITE IN A d.c. TRANSFERRED-ARC PLASMA FURNACE WITH A MOLTEN-ANODE CONFIGURATION

by

Allon Dudley Brent

15th July, 1987

Printed and published by the Council for Mineral Technology

ISBN 0 86999 791 2

Investigator	A.D. Brent
Academic Supervisor	K.J. Reid (University of Minnesota)
Director of Division	N.A. Barcza
Editor	A. Cowey

Programme No.	009
Project No.	22383
Project Report No.	1

All correspondence to Mintek, Private Bag X3015, Randburg, 2125 South Africa

SYNOPSIS

The reduction of ilmenite to yield a high-grade titania slag and a pig iron byproduct in a d.c. transferred-arc plasma furnace was investigated. The aim was the production of a slag suitable for use as feedstock for the fluidized-bed production of titanium tetrachloride. Small-scale (50 kW) batch tests were conducted on three different ilmenite concentrates with widely differing chemical compositions and geological histories. The effects of the particle size of the reducing agent, the carbon stoichiometry, and the reaction time were examined. The influence of these parameters on the grade of the slag, the recoveries of titanium and iron, and the efficiency of the reducing agent are discussed.

The use of magnesia crucibles to contain the melt was found to result in an unacceptable level of magnesia contamination in the slag. This problem was overcome by the use of graphite crucibles and by control of the thermal balance of the furnace so as to maintain a protective 'freeze lining' on the inner walls of the crucible. This freeze lining ensured that the graphite crucible and titania slag did not react chemically. The electrical and physical characteristics of the d.c. transferred-arc plasma furnace were found to be well suited to the smelting of ilmenite. Stable furnace operation was observed during the processing of all three ilmenite concentrates, and slags containing more than 80 per cent titanium dioxide (by mass) were readily obtained.

It is recommended that further work in this area should be conducted on a larger scale and on a continuous basis. The possible use of a d.c. transferred-arc plasma furnace for the processing of pre-reduced ilmenite should also be studied, since this method could result in a considerable saving of electrical energy over existing industrial practices, which do not employ pre-reduction.

SAMEVATTING

Die reduksie van ilmeniet in 'n gs-oordraboogplasmaoond om 'n hoëgraadse titaan(IV)oksiedslak en 'n ru-ysterneweproduk te lewer, is ondersoek. Die oogmerk was die produksie van 'n slak wat geskik is vir gebruik as toevoermateriaal vir die fluïedbedproduksie van titaantetrachloried. Kleinskaalse (50 kW) lottoetse is op drie verskillende ilmenietkonsentrate met wyduiteenlopende chemiese samestellings en geologiese geskiedenisse uitgevoer. Die uitwerking van die partikelgrootte van die reduseermiddel, die koolstofstoïgiometrie en die reaksietyd is ondersoek. Die invloed van hierdie parameters op die graad van die slak, die herwinning van titaan en yster en die doeltreffendheid van die reduseermiddel word bespreek.

Daar is gevind dat die gebruik van magnesiakroese om die smeltsel te hou 'n onaanvaarbare vlak van magnesiakontaminasie in die slak tot gevolg gehad het. Hierdie probleem is oorkom deur die gebruik van grafietkroese en die beheer van die termiese balans van die oond ten einde 'n beskermende 'vriesvoering' op die binnewande van die kroes te handhaaf. Hierdie vriesvoering het verseker dat die grafietkroes en titaan(IV)oksiedslak nie chemies reageer nie. Die elektriese en fisiese eienskappe van die gs-oordraboogplasmaoond het geblyk baie geskik te wees vir die uitsmelting van ilmeniet. Stabiele oondwerking is tydens die verwerking van al drie ilmenietkonsentrate waargeneem en slakke wat meer as 80 massapersent titaandioksied bevat, is maklik verkry.

Daar word aanbeveel dat verdere werk op hierdie gebied op 'n groter skaal en op 'n deurlopende grondslag gedoen word. Die moontlike gebruik van 'n gs-oordraboogplasmaoond vir die verwerking van voorgereduseerde ilmeniet behoort ook bestudeer te word aangesien hierdie metode tot 'n aansienlike besparing van elektriese energie kan lei vergeleke met die bestaande nywerheidsgebruike wat nie van voorreduksie gebruik maak nie.

CONTENTS

LIST OF TABLES

LIST OF ILLUSTRATIONS

1. Introduction

The continuing trend in the titanium-pigment industry to move away from the environmentally objectionable sulphate process towards the chloride route in the manufacture of titanium dioxide has resulted in an increasing demand for high-grade titanium minerals[1–5]. Natural rutile, owing to its high titanium content and low levels of problem-causing impurities, has traditionally been the preferred feedstock for the fluidized-bed production of titanium tetrachloride ($TiCl_4$). This is an intermediate product required for both the manufacture of titanium metal and the production of titanium dioxide pigment by the chloride method. The chloride process for the production of pigment is preferred over the sulphate process, not only because it produces less effluent, but also because it requires less processing energy and produces a superior quality of pigment. The overall operating costs for chloride plants, which operate on a continuous basis and can be easily automated, are reportedly as much as 30 per cent lower than those for sulphate plants[4].

Three naturally occurring titanium minerals can theoretically be used as chlorinator feedstock, viz rutile, leucoxene, and ilmenite. Natural rutile, which has a nominal titanium dioxide content of 96 per cent and is low in problem-causing impurities, is readily chlorinated to high-purity titanium tetrachloride. Ilmenite concentrates, owing to their low titanium grades (usually around 50 per cent titanium dioxide) and high impurity contents, are generally unsuitable for chlorination, and hence have been used primarily as feedstock for the production of pigment by the sulphate process. One of the major problems associated with the direct chlorination of ilmenite is the large quantity of ferric chloride that results. Compared with the 0,12 t of effluent that is produced for each ton of titanium tetrachloride manufactured from rutile containing 96 per cent titanium dioxide, the waste from the direct chlorination of an ilmenite concentrate containing 50 per cent titanium dioxide is 1,5 t for each ton of titanium tetrachloride produced. The disposal of such large quantities of ferric chloride presents a severe pollution threat to the environment, as well as a significant loss of chlorine from the process.

Since the problems associated with the direct chlorination of ilmenite have not yet been solved, and since reserves of natural rutile continue to decline, the trend in the pigment industry has been to seek methods for the enrichment of ilmenite to serve as a suitable substitute for rutile. The processes that have been developed in this area produce either a titania-rich slag (containing between 80 and 85 per cent titanium dioxide by mass) or a form of synthetic rutile (containing between 90 and 96 per cent titanium dioxide). Figure 1 depicts the four major technically feasible routes for the production of rutile substitutes. Two of the routes involve the solid-state reduction of the ilmenitic iron (either partially or totally), followed by leaching steps for the removal of the reduced iron. Another route involves the removal of the ilmenitic iron by selective (i.e. partial) chlorination. Although this route is theoretically feasible, iron exhibits a greater affinity for chlorine than does titanium, which results in the formation of large quantities of environmentally objectionable ferric chloride. The thermal reduction route is carried out in conjunction with the electric-arc smelting of iron. The major advantage of this route over the other three is that the ilmenitic iron is recovered directly in a marketable form (viz pig iron).

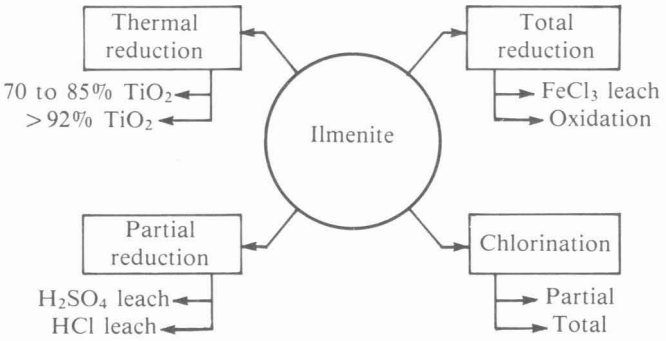

FIGURE 1. Technically feasible routes for the upgrading of ilmenite to synthetic rutile (after Kahn[5])

The present investigation, which was initiated and supported by the Council for Mineral Technology (Mintek) and supervised by the University of Minnesota, focused on the thermal reduction of ilmenite concentrates for the production of rutile substitutes. The suitability of a transferred-arc plasma furnace with a molten-anode configuration for ilmenite smelting was evaluated.

The application of plasma technology to metallurgical processes has been attracting increasing interest over the past decade[6,7]. Although this technology was originally confined to melting applications, it is being applied increasingly to smelting processes. In particular, a great deal of research has been conducted in the ferro-alloy field, since many low-grade ores are not amenable to conventional ferro-alloy smelting practices[8–11]. The high electrical conductivity of titania slags necessitates an open-arc mode of operation in ilmenite-smelting operations[12]. The major voltage drop across each electrical phase supplying power to such a furnace occurs within the arc itself, thereby making the power input to the furnace largely independent of the electrical conductivity of the slag. The pattern of energy dissipation within the furnace determines both the productivity of the smelting process and the efficiency of the utilization of electrical energy.

The range of possible slag compositions in an ilmenite-smelting process is limited mainly by the following two factors:

(i) specifications imposed by manufacturers of titanium dioxide pigment, who are the primary consumers of titania slag, and
(ii) the physical properties of the slag that may affect the operation of the smelting furnace.

The technology for the smelting of ilmenite was originally developed to produce titania slags suitable for

the production of titanium dioxide pigment via the sulphate process. Although the sulphate process is able to utilize slags of lower grade than the chloride process, the mineralogical composition of the slag is of major importance in the sulphate process.

Producers of titanium tetrachloride are generally able to process feedstocks containing more than 80 per cent titanium dioxide by mass. However, additional specifications are imposed on some impurities, particularly on the levels of calcium and magnesium. These two elements cause problems in fluidized-bed chlorinators, since they form chlorides with relatively high boiling points, which tend to clog both the bed itself and the gas ducting leading from the reactor[13]. The specification imposed on these two elements is that the sum of their oxides should not exceed 1,2 per cent of the feed by mass, although some manufacturers of chloride require that the separate values for calcium oxide and magnesium oxide should be less than 0,2 per cent and 1 per cent respectively.

These specifications effectively rule out the addition of modifiers or fluxes to alter the physical properties of the slag. Also, a low-ash reducing agent for the iron oxides must be used in order to avoid contamination of the titania slag. The reduction of the ilmenite concentrate must be accurately controlled to yield a slag with an acceptable titanium dioxide grade while still maintaining a sufficient level of residual ferrous oxide to act as a flux. Apart from acting as a flux by diluting the titanium dioxide, the ferrous oxide in the slag has the further function of assisting in the control of the oxygen potential. Under very strongly reducing conditions, in which the ferrous oxide content of the slag is depleted, a substantial proportion of the titanium dioxide may resort to lower oxides, such as Ti_2O_3, Ti_3O_5, and even TiO. The formation of these suboxides results in a large increase in the viscosity of the slag, which can lead to operational instabilities such as slag frothing.

The high electrical conductivity of titania slags and the accurate control of the slag chemistry that are required for the production of a suitable chlorinator feedstock effectively rule out the use of conventional submerged-arc technology for the smelting of ilmenite. The application of blast-furnace technology to such smelting is also not appropriate, because the high viscosity of titania slags renders them incompatible with conventional blast-furnace practice. As a result of these difficulties, a.c. open-arc electric furnaces are conventionally used in ilmenite-smelting operations[14]. Although this technology is fairly well established, the use of the d.c. molten-anode plasma furnace offers the following potential advantages over that of a.c. open-arc furnaces.

a. The inherent stability of a d.c. arc offers the potential for improved operational control. Complex electrode controllers are required in a.c. smelting furnaces to control the operating power of the furnace, as well as to maintain a balance between electrical phases. This potential for greater control in d.c. smelters offers more flexibility with the process chemistry, and may permit the production of a superior grade of slag in a d.c. plasma furnace without the slag-frothing problems that plague a.c. smelters. Improved operational stability may also allow the smelting of some ilmenite ores that are now regarded as difficult because of variations in mineral grade and quality within the deposit. Also, d.c. molten-anode furnaces may be able to process pre-reduced material, which is considered at present to be less suitable than ore fines for use in a.c. open-arc smelters because of the variability in carbon balance that such material introduces. The inclusion of such a pre-reduction step in an ilmenite-smelting operation could result in a significant saving of electrical energy and an increase in production.

b. As a result of the more effective energy-transfer mechanisms operative in a d.c. arc, it may be possible to obtain higher thermal efficiencies in a d.c. plasma furnace than in a conventional a.c. smelter. Molten-anode plasma furnaces take advantage of the high proportion of energy dissipated at the anodic attachment point of the arc by using the surface of the molten bath as the anode. Calorimetric studies carried out on d.c. plasma arcs indicate that up to 80 per cent of the total arc power can be transferred directly to the anode material[15].

c. Direct-current operation offers the potential for a considerable saving in electrode consumption. The severe operational conditions encountered in open-arc furnaces preclude the use of the self-baking Søderberg electrodes developed for submerged-arc furnaces. The relatively rapid movement and high thermal and mechanical stresses to which open-arc furnace electrodes are subjected necessitate the use of stronger, more expensive pre-baked graphite electrodes. As a result, the costs of the electrodes generally constitute the second-highest operational expense in ilmenite-smelting operations. There are two reasons why d.c. furnaces have the potential for substantial reductions in electrode wear. Firstly, the high proportion of energy directed at the anode allows the tip of the elecrode to operate at somewhat lower temperatures than is the case with alternating current and, secondly, current-return electrodes are not required in d.c. molten-anode furnaces, where contact is made via the bath itself.

d. The arc-stabilizing gas injected through the centre of the hollow graphite electrodes used in d.c. plasma furnaces allows a certain degree of control over the electrical characteristics of the arc. Both the type and the flowrate of the gas influence the voltage drop across the arc for a given length of arc. The exercise of this controlling influence on the electrical characteristics of the arc may be desirable when problems of operational stability are encountered.

In the present investigation, three different ilmenite concentrates were smelted in a molten-anode plasma furnace, employing a batch mode of operation. Concentrates with widely differing chemical compositions and geological histories were chosen. The aim of the investigation was to demonstrate the suitability of the molten-anode plasma furnace for the production, from a variety of raw materials, of a grade of titania slag suitable for subsequent processing by the chloride route.

2. Ilmenite Concentrates Studied

Ilmenite concentrates from three different deposits were used. The chemical analyses of these materials are given in Table 1, and the size analyses in Table 2. The South African concentrate originated from a beach-sand placer deposit. The concentrate from Florida, U.S.A., was a highly weathered material, which also originated from a beach-sand placer deposit. The exceptionally high titanium grade of this material (63 per cent titanium dioxide by mass) is an indication of the degree to which the ilmenite has been altered to leucoxene. The Finnish concentrate originated from a primary magmatic orebody, and had undergone virtually no alteration. Smelting tests were conducted both at Mintek and at the Mineral Resources Research Center of the University of Minnesota.

3. Smelting Trials with Magnesia Crucibles

Preliminary smelting trials were carried out on the pre-oxidized South African ilmenite concentrate in Mintek's 50 kW plasma furnace. The aim of these tests was the production of a titania slag suitable for use as chlorinator feedstock from a South African raw material in a molten-anode plasma furnace. The effects of the particle size of the reducing agent, time of reaction, and stoichiometry of the reducing agent on the smelting operation were investigated. Calcined anthracite was used as the reducing agent in these tests. The proximate analysis of this material is shown in Table 3, and the detailed chemical analysis of the ash content in Table 4.

3.1. Equipment and Procedure

Figure 2 is a schematic diagram of Mintek's 50 kW water-cooled furnace. The magnesia crucibles and sleeves for the furnace were produced by a local manufacturer of refractories. A tapered mild-steel bar protruding through the base of the crucible provides an electrical path between the melt and the graphite base to which the positive cables from the power supply are connected. The main purpose of the graphite base is to maintain the integrity of the steel anode by acting as a large heat sink.

TABLE 1

Chemical analyses of ilmenite concentrates

Origin of concentrate	Analysis, % (by mass)									
	TiO_2	FeO	Fe_2O_3	SiO_2	MnO	CaO	MgO	Al_2O_3	Cr_2O_3	V_2O_5
South Africa	49,4	22,3	25,3	0,64	n.d.	0,04	0,65	0,40	0,13	0,25
Finland	44,9	37,3	9,75	1,07	0,77	0,56	2,16	1,64	<0,01	0,70
Florida	63,0	4,68	26,64	0,45	1,33	0,21	0,28	1,15	0,12	0,78

n.d. Not determined

TABLE 2

Size analyses of ilmenite concentrates

Origin of concentrate	Size fraction (standard Tyler mesh)					
	<100	100 to 150	150 to 200	200 to 270	270 to 325	>325
South Africa	3,5	44,6	15,5	0,4	0,0	36,0
Finland	7,7	10,6	10,6	8,7	3,4	59,0
Florida	4,8	44,7	13,7	0,4	0,0	36,4

All analyses are expressed in percentages (by mass) retained

TABLE 3

Proximate analysis of calcined anthracite reducing agent

Size fraction*	Analysis, % (by mass)		
	Ash	Volatile matter	Fixed carbon
Coarse	8,5	0,58	90,8
Medium	7,6	0,46	91,9
Fine	11,9	0,56	87,5

* Coarse >4,76 mm
Medium <4,76>1,68 mm
Fine <1,68 mm

TABLE 4

Chemical analysis of the ash content of calcined anthracite reducing agent (expressed in percentage by mass)

SiO_2	Al_2O_3	MgO	CaO	Fe_2O_3	TiO_2	MnO_2
57,8	33,5	1,00	1,09	6,15	1,95	0,10

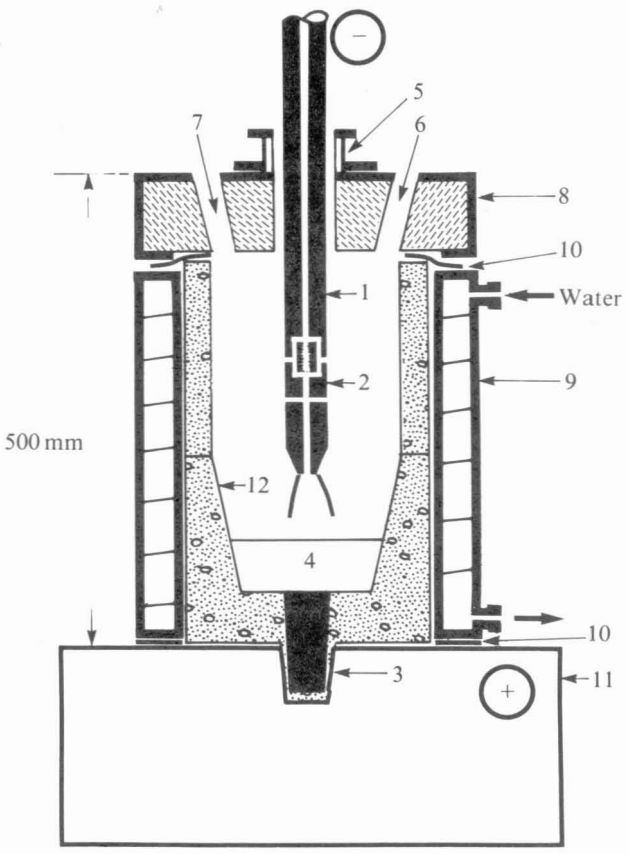

1 Central hollow graphite cathode
2 Electrode tip
3 Steel anode
4 Molten bath
5 Electrode seal
6 Feed port
7 Gas offtake
8 Steel roof with magnesia lining
9 Water jacket
10 Insulation blanket (ceramic fibre)
11 Graphite block
12 Refractory crucible

FIGURE 2. The 50 kW plasma furnace used at Mintek

The power supply to the furnace consists of two 600 A (at 60 per cent duty cycle) welding transformer–rectifiers connected in a parallel circuit so as to allow continuous operation at 800 A. A 20 mm tapered graphite electrode is used as the cathode, and adjustments to the height of the cathode are made by the activation of a hydraulic cylinder connected to the electrode clamp.

The water-cooled jacket used in the tests had been developed for previous work on ferrotitanium smelting, in which severe erosion of the refractories had been encountered[16]. This design of water-cooled furnace proved highly effective in eliminating the problem of refractory attack by allowing a protective freeze lining to be formed between the crucible material and the corrosive melt. A similar strategy was envisaged for the ilmenite-smelting trials to prevent contamination of the slag by magnesia. The temperature of both the inlet and the outlet cooling water were continuously monitored by thermocouples and so indicated losses of heat through the side walls of the furnace. The magnitude of the heat loss was used as a guide to impending erosion of the crucible.

A standard operating procedure that yielded reproducible results was developed. Each run was a self-contained batch operation. Charges of 6 kg were used for all the tests, and the magnesia crucible, mild-steel anode, and graphite cathode were weighed before each test. The graphite cathode was also weighed after each test so that the electrode consumption could be determined. After completion of a run, the furnace was allowed to cool, then disassembled, and the magnesia crucible was broken to liberate the metal and slag products. Unreacted material adhering to the refractory sleeve above the crucible, and that contained in the freeze line zone, was simply regarded as unreacted feed. The metal settled to the bottom of the crucible, and usually became attached to the mild-steel anode. Argon was used as the arc-stabilizing gas at a flowrate of 10 l/min (at n.t.p.) for all the tests.

3.2. Results and Discussion

The reproducibility of the results was excellent, repeated tests yielding slags differing in titanium dioxide content by less than 2 per cent by mass. A number of tests were conducted for each particular composition of charge, and the averages of the results obtained are reported here. Details of the charges used for these tests and the operational conditions are given in Table 5.

The effects of the particle size of the reducing agent were examined for two levels of stoichiometric carbon in tests TS-1 to TS-6. Tests TS-7 and TS-8 were designed to show the effect of increased reaction time. The chemical analyses of the slags and metals obtained in these tests are shown in Tables 6 and 7 respectively. The slag analyses on a magnesia-free basis are given in Table 8. The recoveries, efficiencies of the reducing agent, and electrode consumptions are reported in Table 9.

The electrode consumptions were generally higher in the tests in which the carbon used was the stoichiometric requirement than in those which employed 10 per cent in excess of the stoichiometric requirement of carbon. The electrode consumption was also found to increase with increasing reaction time. Both these trends are to be expected. It should be noted that the rate of erosion of the graphite cathode is also a function of the arc current, a variable that was not controlled directly. The power supply to Mintek's 50 kW plasma furnace is controlled on a basis of constant power rather than of constant current.

3.2.1. Quality of Slag

Although many of the slags obtained met the minimum titanium dioxide grade required for chlorinator feedstock, in all cases the maximum magnesium oxide specification was exceeded. The magnesia contamination resulted from material that dissolved from the crucible walls into the slags. The lowest magnesium oxide value obtained was 3,65 per cent (by mass) for the slag produced in test TS-4. This is still well in excess of the maximum allowable total of 1,2 per cent (by mass) for the combined sum of calcium oxide plus magnesium oxide. These tests indicated that the cooling system for the furnace was not providing ade-

TABLE 5

Composition of charges and operational conditions in the first series of smelting trials

Test no.	Carbon, % of stoichiometric amount	Size of reducing agent*	Composition of charge % (by mass)		Total time of test min	Average arc power kW
			Ilmenite concentrate	Calcined anthracite		
TS-1	110	Coarse	89,77	10,23	65	23,6
TS-2	110	Medium	89,88	10,12	65	22,9
TS-3	110	Fine	89,42	10,58	65	23,5
TS-4	100	Coarse	90,61	9,39	65	23,7
TS-5	100	Medium	90,71	9,29	65	23,8
TS-6	100	Fine	90,29	9,71	65	22,3
TS-7	110	Medium	89,77	10,23	95	21,8
TS-8	110	Coarse	89,88	10,12	95	21,5

* Calcined anthracite was used as the reducing agent for these tests. The actual size fractions involved are given in Table 3

The total mass of the charge was 6,00 kg for each test

TABLE 6

Analyses of slag from the first series of smelting trials

Test no.	Slag analysis, % (by mass)								
	TiO_2*	FeO	MgO	SiO_2	MnO	Al_2O_3	CaO	Cr_2O_3	Total
TS-1	82,7	6,96	7,70	0,92	1,60	0,69	0,47	0,15	100,2
TS-2	81,5	6,97	8,50	1,38	1,67	0,74	0,49	0,19	101,4
TS-3	69,3	18,2	8,50	1,52	1,66	0,42	0,60	0,27	100,5
TS-4	79,0	14,3	3,65	1,34	1,82	0,79	0,32	0,19	101,4
TS-5	74,8	16,7	5,39	1,51	1,79	0,56	0,33	0,24	101,3
TS-6	63,0	19,2	14,1	1,24	1,40	0,27	0,34	0,26	99,8
TS-7	75,9	3,92	17,3	1,66	1,58	0,62	0,40	0,12	101,5
TS-8	81,5	1,89	14,6	1,64	1,53	0,84	0,39	0,03	102,4

* The total titanium content of the slag is reported as TiO_2. Owing to the presence of suboxides (Ti_2O_3, Ti_3O_5, and TiO), the totals are generally just over 100 per cent for slags with low contents of FeO

TABLE 7

Analyses of metal from the first series of smelting trials

Test no.	Metal analysis, % (by mass)								
	Fe	C	Mn	Si	Cr	Ti	S	P	Total
TS-1	96,9	2,7	0,05	0,01	0,04	0,03	0,04	0,03	99,80
TS-2	96,9	2,4	0,08	<0,01	0,05	<0,01	0,04	0,05	99,52
TS-3	95,75	1,8	0,04	0,08	0,02	0,07	0,05	0,04	97,85
TS-4	97,1	2,8	0,04	<0,01	0,03	0,02	0,06	0,05	100,1
TS-5	97,5	2,5	0,07	<0,01	0,01	0,06	0,07	0,06	100,3
TS-6	98,8	1,1	0,03	<0,01	<0,01	0,31	0,04	0,06	100,3
TS-7	96,8	3,5	0,03	<0,01	0,10	0,06	0,04	0,03	100,6
TS-8	96,5	2,7	0,05	0,07	0,13	0,09	0,03	0,05	99,6

quate protection to the magnesia crucibles from the corrosive titania slags.

3.2.2. Effect of Carbon Stoichiometry

The effect of carbon stoichiometry on the titanium dioxide grade of the slags is illustrated in Table 10. The slag analyses are reported on a magnesia-free basis, so eliminating the dilution effect of magnesia from the crucible. The titanium dioxide grade of the slags obtained in the tests that used 10 per cent excess carbon was significantly higher than those obtained when the stoichiometric amount of carbon was used. The influence of car-

TABLE 8

*Analyses of slag from the first series of smelting trials on a magnesia-free basis**

Test no.	Slag analysis, MgO-free, % (by mass)							
	TiO_2	FeO	SiO_2	MnO	Al_2O_3	CaO	Cr_2O_3	Total
TS-1	89,5	7,54	1,00	1,73	0,74	0,51	0,16	100,2
TS-2	88,9	7,61	1,51	1,82	0,81	0,53	0,21	101,4
TS-3	75,7	19,9	1,64	1,81	0,46	0,65	0,30	100,4
TS-4	82,0	14,8	1,39	1,89	0,82	0,33	0,20	101,4
TS-5	79,0	17,6	1,59	1,89	0,59	0,35	0,25	101,3
TS-6	73,4	22,4	1,44	1,63	0,31	0,39	0,30	99,8
TS-7	91,5	4,73	2,00	1,90	0,75	0,48	0,14	101,5
TS-8	95,0	2,20	1,91	1,78	0,98	0,45	0,03	102,4

* For a particular slag, the magnesia-free value for component y was calculated as

$$\text{MgO-free value for } y = (\text{Actual value for } y) \times \frac{\text{Actual total, \%}}{(\text{Actual total, \%} - \text{MgO, \%})}.$$

This method of calculation gives the same values for the totals as those listed in Table 6

TABLE 9

Recoveries, efficiencies of reducing agent, and electrode consumptions for the first series of smelting trials

Test no.	Recovery of TiO_2 in slag %	Recovery of Fe in metal %	Efficiency of reducing agent %	Electrode consumption g/(kg of feed)
TS-1	92	81	78	5,2
TS-2	93	83	79	5,4
TS-3	94	61	63	5,7
TS-4	95	71	77	6,0
TS-5	92	62	70	5,8
TS-6	87	53	62	6,2
TS-7	90	82	79	7,8
TS-8	95	87	82	8,0

TABLE 10

Effect of carbon stoichiometry and particle size of the reducing agent on slag grade in the first series of smelting trials

Size fraction of calcined anthracite	Carbon, % of stoichiometric amount	TiO_2 content of slag on an MgO-free basis % (by mass)
Coarse	110	89,5
Coarse	100	82,0
Medium	110	89,0
Medium	100	79,0
Fine	110	75,7
Fine	100	73,4

TABLE 11

Effect of particle size of the reducing agent and carbon stoichiometry on the recovery of iron and the efficiency of the reducing agent in the first series of smelting trials

Carbon, % of stoichiometric amount	Size fraction of calcined anthracite	Recovery of Fe in metal %	Efficiency of reducing agent %
100	Coarse	71	77
100	Medium	62	70
100	Fine	53	62
110	Coarse	83	79
110	Medium	83	79
110	Fine	61	63

bon stoichiometry on the recovery of iron is given in Table 11. As would be expected, the recoveries of iron obtained in the tests conducted with 10 per cent excess carbon were significantly higher than those obtained when the stoichiometric amount was used.

3.2.3. Influence of Particle Size of Reducing Agent

The influence of the particle size of the reducing agent on the recovery of iron and the efficiency of the reducing agent is illustrated in Table 11. The coarse and medium size fractions of reducing agent generally yielded similar values for both the recovery of iron and the efficiency of the reducing agent, whereas the fine fraction consistently produced poorer results. The reducing-agent efficiency obtained with the fine fraction of calcined anthracite was over 15 per cent lower than that achieved with the coarse fraction. This poorer efficiency is also reflected in the grades of slag produced. On a magnesia-free basis, the titanium dioxide content of the slags obtained when the fine fraction of calcined anthracite was used at 10 per cent in excess of the stoichiometric requirement of carbon was only around 75 per cent (by mass). By comparison, the slags produced when both the coarse and the medium fractions of calcined anthracite were used at the same carbon stoichiometry contained around 89 per cent titanium dioxide on a magnesia-free basis (Table 10).

The poor results obtained with the fine fraction of calcined anthracite can be attributed to excessive entrainment of reducing agent in the furnace off-gas. The fine anthracite (smaller than 10 mesh on the standard Tyler series) is a light material and can therefore easily become entrained in the furnace exhaust gases.

3.2.4. Effect of Reaction Time

Tests TS-7 and TS-8 were conducted over an extended period of time (95 minutes compared with 65 minutes for the other tests) so that the effect of reaction time on the products could be determined. The slags obtained in these two tests had higher contents of magnesium oxide than the other slags produced, since the extended reaction time allowed the increased dissolution of crucible material (Table 6). The only significant improvement in slag grade (on a magnesia-free basis) when the reaction time was increased occurred in tests in which the coarse size fraction of reducing agent was used. The slag grade of 95

per cent titanium dioxide (on a magnesia-free basis) obtained in test TS-8 is appreciably higher than the grade of 89 per cent obtained in test TS-1. Test TS-1 was carried out over a period of 65 minutes, and test TS-9 over 95 minutes. The coarse fraction of calcined anthracite was used in both tests (at 10 per cent in excess of the stoichiometric requirement of carbon), and it is believed that these large particles of reducing agent had not completely reacted in the 65 minutes allowed in test TS-1.

4. Smelting Trials with Graphite Crucibles

The aim of these tests was to show the grades of titania slags obtainable when ilmenite was smelted in graphite crucibles. Graphite was chosen as the material for the crucibles because it would avoid the magnesia contamination that had been encountered in the first series of smelting tests. The effect of varying carbon stoichiometry on the quality of the slags produced was assessed for all three ilmenite concentrates studied. Since the effect of the particle size of the reducing agent had been investigated in the first series of trials, this parameter was fixed for the second series of tests. Only the carbon stoichiometry was varied between individual tests conducted on a particular concentrate. Crushed graphite (containing 97 per cent fixed carbon) between 4 and 10 mesh in size (on the standard Tyler series) was used as the reducing agent for these tests.

4.1. Equipment and Procedure

The 40 kW water-cooled plasma furnace at the Mineral Resources Research Center of the University of Minnesota was used for these tests (Figure 3). The base of the graphite crucible provides an electrical path between the melt and the positive side of the power supply. The arc is struck from a graphite cathode that is threaded onto a water-cooled cathode holder made of copper. The water-cooled steel jacket protects the graphite crucibles from reaction with the slag by ensuring the formation of a protective freeze lining on the inner walls of the crucible.

The space between the graphite crucible and the water-cooled jacket is filled with alumina powder, which provides thermal and electrical insulation. The power supply to this furnace is controlled on a constant-current basis. Electrical parameters and thermocouple temperatures on the cooling circuits are continuously monitored by means of a microcomputer. Accurate control of the furnace thermal balance must be maintained to ensure good reproducibility of results and to avoid reaction with the graphite crucible. The charges and average arc power for these tests are given in Table 12. All the tests were conducted over a period of 60 minutes with an arc current of 400 A.

4.2. Results and Discussion

4.2.1. Effect of Carbon Stoichiometry

The analyses of the slags and metals obtained in these tests are shown in Tables 13 and 14 respectively. The titanium dioxide content of the slags, plotted as functions of the amount of excess carbon, are shown in Figure 4. It is evident from the magnesium oxide values shown in Table 13 that the use of a graphite crucible overcame the problem of slag contamination that had been encountered in the first series of smelting trials. No visible reaction between the melt and the walls of the graphite crucible was evident when the reaction products were separated from the crucible. The high values of ferrous oxide reporting to the slag at lower carbon stoichiometry are an indication of the effectiveness of the protective freeze lining formed against the inner walls of the crucible. No significant loss of crucible mass could be detected over individual tests.

The minimum titanium dioxide grade of 80 per cent required for chlorinator feedstock would be met if the ilmenite concentrate from South Africa were smelted with approximately 110 to 115 per cent of the stoichiometric requirement of carbon.

The concentrate from Finland required approximately 120 to 125 per cent of the stoichiometric requirement of carbon to yield a slag of 80 per cent titanium dioxide. However, the slags obtained from this concentrate are unsuitable for fluidized-bed chlorination owing to their high magnesia contents (Table 13). The magnesium oxide present in the Finnish ilmenite (2,16 per cent by mass, Table 1) is concentrated further in the smelting operation, resulting in a slag product containing between 3 and 4 per cent magnesium oxide.

The highly weathered ilmenite from Florida yielded a slag that met the 80 per cent titanium dioxide specification when smelted with between 110 and 120 per cent of the stoichiometric requirement of carbon. The low levels of magnesium oxide and calcium oxide in the Florida concentrate ensure that a slag obtained from this material meets all the specifications imposed on chlorinator feedstock.

The electrode consumption was found to decrease with increasing carbon stoichiometry (Table 15) owing to the more powerful reducing conditions in the presence of excess carbon.

4.2.2. Recoveries and Efficiencies of the Reducing Agent

The recoveries and efficiencies of the reducing agent obtained in these tests are shown in Table 15. Titanium recoveries of approximately 90 per cent were obtained in all the tests. The recovery of iron improved with the use of excess carbon, the highest values being obtained for the runs conducted at 30 per cent excess carbon. The improved reduction of iron obtained at higher levels of carbon is evident when the ferrous oxide contents of the slags obtained at 30 per cent excess carbon are compared with the values obtained with the stoichiometric carbon requirement (Table 13).

A comparison of the efficiencies of the reducing agent for the South African ilmenite (Table 15) with those for the coarse and medium fractions of anthracite used in the first series of smelting trials (Table 11) shows that somewhat lower efficiencies were obtained in the second series of tests. This is partly attributed to the lower reactivity of the crushed-graphite reducing agent used in the second series of tests.

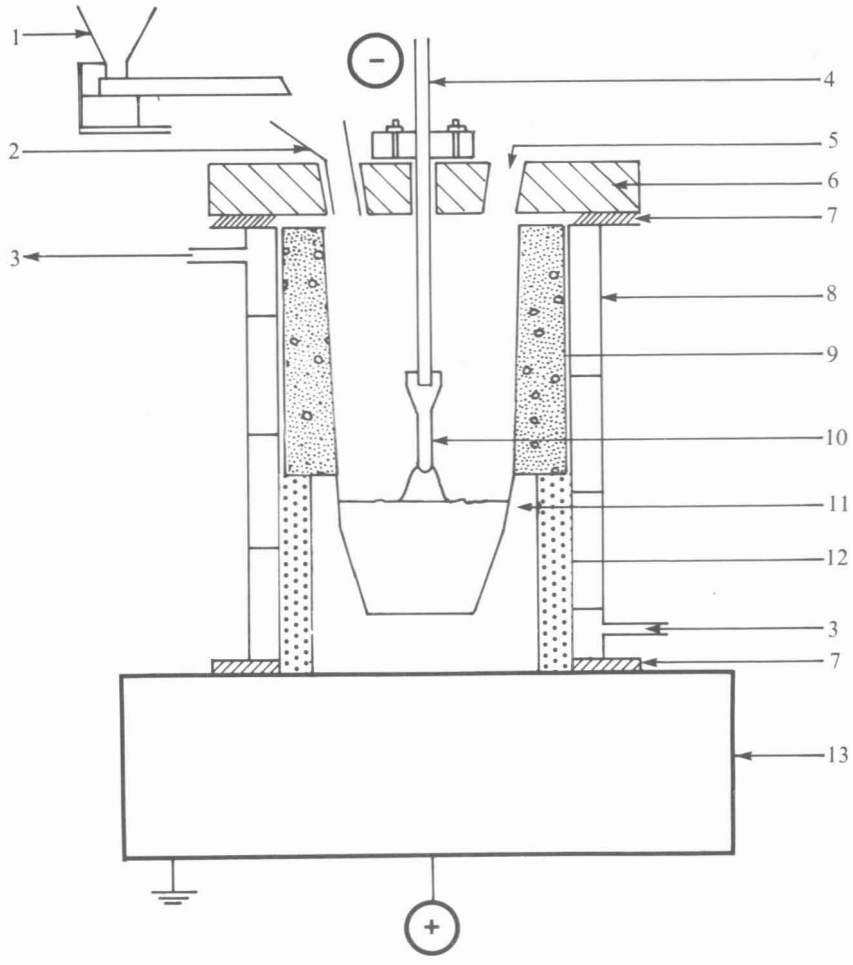

1 Vibratory feeder
2 Steel funnel
3 Cooling water
4 Water-cooled copper cathode holder
5 Exhaust port
6 Magnesia-lined roof
7 Alumina-fibre blanket
8 Water-cooled steel jacket
9 Alumina sleeve
10 Graphite cathode
11 Graphite crucible
12 Alumina powder
13 Graphite base

FIGURE 3. The 40 kW plasma furnace used at the Mineral Resources Research Center

TABLE 12

Charges and operational conditions in the second series of smelting trials

Test no.	Origin of ilmenite concentrate	Carbon*, % of stoichiometric amount	Composition of charge % (by mass)		Total mass of charge kg	Average arc power kW
			Ilmenite concentrate	Crushed graphite		
SA-1	South Africa	100	91,2	8,8	4,00	23,1
SA-2	South Africa	110	90,1	9,9	4,00	24,1
SA-3	South Africa	130	89,0	11,0	4,00	24,0
FND-1	Finland	100	92,0	8,0	4,00	23,7
FND-2	Finland	110	91,3	8,7	4,00	23,5
FND-3	Finland	130	89,9	10,1	4,00	23,8
FLA-1	Florida	110	92,8	7,2	4,00	22,7
FLA-2	Florida	130	91,7	8,4	4,00	23,2

* Crushed graphite (containing 97 per cent fixed carbon) was used as the reducing agent in these tests

TABLE 13

Analyses of slag from the second series of smelting trials

Test no.	Slag analysis, % (by mass)						
	TiO_2*	FeO	MgO	MnO	Al_2O_3	CaO	Total
SA-1	69,3	25,30	0,79	1,49	1,25	0,25	98,38
SA-2	77,4	14,40	0,72	1,62	0,73	0,31	95,18
SA-3	96,5	3,42	0,71	0,96	1,56	0,34	103,5
FND-1	66,8	20,99	3,43	0,93	3,24	0,98	96,37
FND-2	73,5	12,68	4,01	1,11	3,59	1,19	96,08
FND-3	84,3	5,86	3,97	0,91	4,09	1,29	100,4
FLA-1	79,0	18,79	0,31	1,54	1,58	0,37	101,6
FLA-2	83,0	15,09	0,32	1,44	1,40	0,28	101,5

* The total titanium content of the slag is reported as TiO_2. Owing to the presence of suboxides (Ti_2O_3, Ti_3O_5, and TiO), the totals are generally just over 100 per cent for slags with low contents of FeO

TABLE 14

Analyses of metal from the second series of smelting trials

Test no.	Metal analysis, % (by mass)								
	Fe	C	Mn	Si	Cr	Ti	S	P	Total
SA-1	94,79	4,90	0,01	<0,01	0,02	0,34	<0,02	0,04	100,1
SA-2	95,28	4,41	0,01	<0,01	0,03	0,02	0,03	0,02	99,80
SA-3	95,72	2,93	0,03	0,15	0,14	0,50	0,02	0,01	99,50
FND-1	97,34	1,47	<0,01	<0,01	<0,01	0,02	0,28	0,03	99,14
FND-2	96,80	1,77	0,02	<0,01	<0,01	0,09	0,21	0,04	98,93
FND-3	96,91	2,70	0,04	0,03	<0,01	0,03	0,37	0,03	100,1
FLA-1	94,63	4,98	0,01	<0,01	0,02	0,03	<0,02	0,27	99,94
FLA-2	93,76	4,92	0,02	<0,01	0,03	0,03	0,03	0,30	99,09

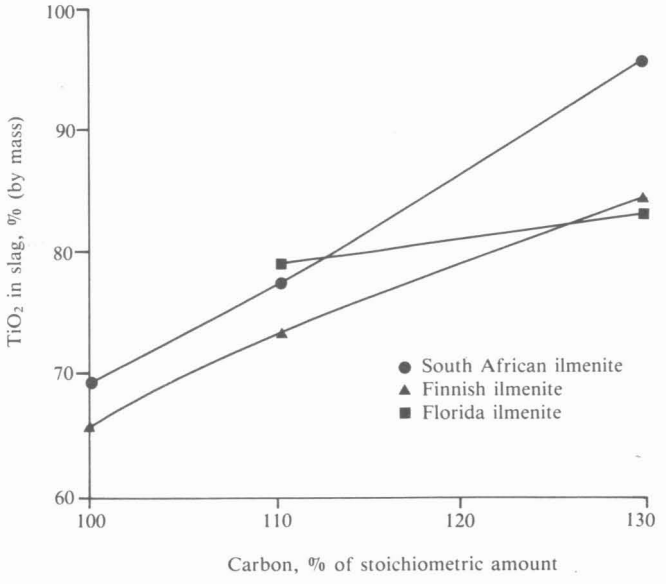

FIGURE 4. Influence of carbon stoichiometry on the grade of the slag in the second series of smelting trials

TABLE 15

Recoveries, efficiencies of reducing agent, and electrode consumptions for the second series of smelting trials

Test no.	Recovery of TiO_2 in slag %	Recovery of Fe in metal %	Efficiency of reducing agent %	Electrode consumption g/(kg of feed)
SA-1	87,4	54,4	62	8,0
SA-2	91,8	63,1	60	6,5
SA-3	93,6	84,0	66	5,3
FND-1	89,2	47,1	50	9,0
FND-2	85,9	73,0	66	7,5
FND-3	91,6	82,1	62	7,0
FLA-1	89,9	49,1	56	8,0
FLA-2	92,8	52,3	49	7,0

5. Conclusions

The major conclusions that can be drawn from this investigation are summarized below.

a. A d.c. transferred-arc plasma furnace with a molten-anode configuration is well suited to the smelting of fine ilmenite concentrates for the production of high-titania slag and byproduct pig iron. The electrical and physical characteristics of this reactor configuration are compatible with both the process chemistry and the physical properties of high-titania slags.
b. To meet the stringent chemical specifications imposed on titania slags that are intended for use as chlorinator feedstock, graphite had to be used as the refractory material containing the melt. Significant contamination by magnesium oxide was encountered when magnesia crucibles were used for smelting. This finding is in agreement with previous work carried out by other investigators in this field.
c. The use of an excessively fine carbonaceous reducing agent produced poor results in terms of both the grade of the slag and the efficiency of the reducing agent. High losses of fine reducing agent by entrainment in the furnace off-gas are believed to be the major cause of these results. The optimum size range of reducing agent was found to be between 4 and 10 mesh (standard Tyler series).
d. Three different ilmenite concentrates of widely differing compositions and geological histories were smelted. Concentrates obtained from both placer and primary deposits were used. The production of slags meeting the minimum titanium dioxide grade of 80 per cent imposed on chlorinator feedstock was possible from all three concentrates. Approximately 120 per cent (on average) of the stoichiometric carbon was required for this grade of slag to be obtained from the three concentrates studied. This value is based on the theoretical amount of carbon required to reduce only the iron oxides contained in the concentrates. Although the titanium dioxide grade required of chlorinator feedstock could easily be achieved from all three concentrates used in these tests, the slag produced from the concentrate from Finland did not satisfy the magnesium oxide specification. This was due to the high content of magnesium oxide in the concentrate itself.

6. Proposals for Future Work

So that representative values can be obtained for the electrode consumption and specific energy requirements, it is recommended that further work should be conducted on a larger scale and on a continuous basis. The batch mode of operation employed in this investigation, although ideally suited to an examination of the process chemistry, is unable to provide realistic values for the specific energy requirements. Also, the high ratio of surface area to volume of the small electrodes that were used tends to give exaggerated values for the electrode consumption. Also, small differences in the electrode consumption resulting from changing operational parameters tend to be masked by the small losses of mass occurring in an individual test. Continuous operation at the scale of 100 to 200 kW would provide more realistic values for both the electrode consumption and the specific energy requirements.

An investigation into the plasma processing of pre-reduced ilmenite is also strongly recommended since this approach may lead to substantial savings in the costs of the electrical energy used. The inherent operational stability of a d.c. transferred-arc plasma furnace should allow the problems encountered in the processing of pre-reduced material to be overcome.

7. Acknowledgements

Support for the project by both the Council for Mineral Technology (Mintek) and the Mineral Resources Research Center (MRRC) of the University of Minnesota is gratefully acknowledged. Special thanks are due to Professor K.J. Reid for his academic support, and to both Mr H.J. Hearnden of Mintek and Mr N.M. Girgis of the MRRC for their assistance.

8. References

1. YAMADA, S. Ilmenite beneficiation and its implications for titanium dioxide manufacture. *Ind. Miner. (Lond.)*, Jan. 1976. pp. 33–40.
2. KAHN, J.A. Current aspects of non-rutile titanium feedstocks. *LIGHT METALS 1983. Adkins, E.M. (ed.).* Warrendale, AIME, The Metallurgical Society, 1982. pp. 1237–1251.
3. ROSENBAUM, J.B. Titanium technology trends. *LIGHT METALS 1982. Anderson, J.E. (ed.).* Warrendale, AIME, The Metallurgical Society, 1981. pp. 1123–1134.
4. LYND, L.E. Titanium. Washington, U.S. Bureau of Mines, *Mineral Commodity Profile,* 1983.
5. KAHN, J.A. Non-rutile feedstocks for the production of titanium. *J. Met. (N.Y.),* Jul. 1984. pp. 33–38.
6. HAMBLYN, S.M.L. Plasma technology and its application to extractive metallurgy. *Miner. Sci. Eng.,* vol. 9, no. 3. Jul. 1977.
7. MASKE, K.U., and MOORE, J.J. The application of plasma to high temperature reduction metallurgy. *High Temp. Technol.* Aug. 1982. pp. 51–63.
8. BARCZA, N.A., and STEWART, A.B. The potential of plasma-arc technology for the production of ferro-alloys. *INFACON 83. PROCEEDINGS OF THE THIRD INTERNATIONAL FERRO-ALLOYS CONGRESS, TOKYO, 1983.*
9. BARCZA, N.A., CURR, T.R., WINSHIP, W.D., and HEANLEY, C.P. The production of ferrochromium in a transferred-arc plasma furnace. *39TH ELECTRIC FURNACE CONFERENCE PROCEEDINGS. Brower, R., et al. (eds.).* Houston, Iron and Steel Society of AIME, 1982. pp. 243–260.
10. SCHOUKENS, A.F.S., and CURR, T.R. The production of manganese ferro-alloys in transferred-arc plasma systems. *42ND ELECTRIC FURNACE CONFERENCE PROCEEDINGS.* Warrendale (U.S.A.), Iron and Steel Society, AIME, 1985. pp. 161–171.
11. MASKE, K.U. The reduction of chromite in a transferred-arc plasma furnace. Randburg, Council for Mineral Technology, *Report* M178. Jan. 1985. 25 pp.
12. DESROSIERS, R., AJERSCH, F., and GRAU, A. Electrical conductivity of industrial slags of high titania content. Reprint from *PROCEEDINGS OF THE NINETEENTH ANNUAL CONFERENCE OF METALLURGISTS,* Halifax, Nova Scotia, Aug. 1980.

13. MINKLER, W.W. The production of titanium, zirconium and hafnium. *Metall. Treatises,* 1981. pp. 171–182.
14. MCPHERSON, R.D. Mineral processing at Richards Bay Minerals. *PROCEEDINGS, TWELFTH CONGRESS OF THE COUNCIL OF MINING AND METALLURGICAL INSTITUTIONS. Glen, H.W. (ed.).* Johannesburg, The South African Institute of Mining and Metallurgy, 1982. vol. 2. pp. 835–840.
15. STEWART, A.B. The dissipation of energy in d.c. transferred-arc plasma systems and the consequences for the production of ferroalloys. *MINTEK 50. PROCEEDINGS OF THE INTERNATIONAL CONFERENCE ON MINERAL SCIENCE AND TECHNOLOGY. Haughton, L.F. (ed.).* Randburg, Council for Mineral Technology, 1984. vol. 2. pp. 803–815.
16. BRENT, A.D., MCRAE, L.B., and LAGENDIJK, H. The production of ferrotitanium in a d.c. transferred-arc plasma furnace. *PROCEEDINGS OF THE FIFTH INTERNATIONAL IRON AND STEEL CONGRESS, WASHINGTON D.C., APRIL 1986.*