RC Nunnington, KU Maske, AFS Schoukens, TR Curr, and NA Barcza,
Developments in refractories for plasma technology,
Institute of Refractory Engineers' Bi-ennial Colloquium, CSIR, Pretoria, 6 March 1985, 38 pp.

DEVELOPMENTS IN REFRACTORIES FOR PLASMA TECHNOLOGY

By R.C. Nunnington, K.U. Maske, A.F.S. Schoukens,
T.R. Curr, and N.A. Barcza

(Council for Mineral Technology, Randburg)

ABSTRACT

Potential operational problems and associated refractory problems encountered in d.c. transferred-arc plasma furnaces are discussed, and reference is made to the methods by which they were overcome in pilot-scale furnaces.

As many of these problems are common to a.c. open-bath furnaces, they can can be remedied by the use of existing technology, for instance by the introduction of water cooling to minimize erosion of the sidewalls. This cooling can be extended further to facilitate the formation of a protective layer of frozen slag or unreacted feed material at the side walls, which effectively separates the refractory from the molten metal and slag in the bath.

However, owing to the nature of the energy-transfer mechanism in the d.c. transferred-arc furnace, particular care is needed in the design of the hearth and the roof of the furnace, and this requires a significant engineering input. The use of special composite refractories containing graphite or metallic phases are discussed in this context.

1. INTRODUCTION

Studies of thermal plasma-arc technology and its potential advantages over conventional processes for high-temperature extractive metallurgy were started at the Council for Mineral Technology (Mintek) in the mid-1970s. This work was undertaken because the effect of this rapidly developing technology on conventional processes and equipment like the submerged-arc electric smelting furnace needed to be evaluated. The work was regarded as being in the national interest, because it involved the determination of the amenability of local materials to processing, technically and economically, in the various types of plasma systems that were being developed. Mintek also approached industry, in particular ferro-alloy producers, to draw their attention to these new developments.

Project work was undertaken initially at Tetronics Research and Development Limited (TRD) in England, since no plasma pilot-plant facility was available locally. The transferred plasma-arc system at TRD comprises a water-cooled metallic plasma device that is mechanically precessed to spread the arc-contact area over the surface of the bath. The operation is open arc (as opposed to submerged arc), and a controlled input of fine feed material, which enters the furnace via entry ports in the roof, fall under gravity to the surface of the bath where melting, dissolution, and subsequent reduction take place. The smelting of chromium and manganese ores and the melting and refining of off-grade metal fines arising from product handling at existing plants were carried out successfully on this facility at powers up to 0,75 MW.

The need for a local pilot-plant facility became apparent as a result of those successful pilot-plant trials overseas, and Mintek started work on the specification and design of a multi-purpose pilot plant in 1980.

The transferred-arc concept was chosen because of the experience gained at TRD. This paper describes the various types of plasma systems and their interfacing with furnaces with particular reference to the Mintek facilities. The development of refractories, which was necessary so that the problems associated with this new technology could be solved, are described in detail.

2. DESCRIPTION OF THERMAL PLASMAS

A thermal plasma is essentially a state of matter that is reached when sufficient energy is supplied to a gas for it to become partially ionized and electrically conductive. Plasmas have been classified according to their temperatures and pressures and processes currently of interest in pyrometallurgy involve the use of arc-discharge plasmas, which operate near atmospheric pressure at temperatures between 4000 and 10 000 K, and the use of a partially ionized gas like argon or nitrogen to stabilize the arc. The use of a stabilizing gas is an essential feature of the plasma system used in process metallurgy, and distinguishes plasma furnaces from conventional electric-arc furnaces.

3. MEANS OF GENERATING THERMAL PLASMAS

A large amount of energy is required to separate gas molecules or atoms into ions and electrons. The energy for gaseous plasmas used in metallurgical applications is supplied by an external electric field that heats the plasma and forms part of the electrical circuit. The release of this energy and its subsequent adsorption into the process is the essence of the plasma furnace, in which the plasma is used as a medium to convert electrical energy into thermal energy.

Direct or alternating current can be used in plasma furnaces, and hence two or more electrical contacts are required. There are two

basic electrical configurations: non-transferred and transferred arc (Fig. 1). In the non-transferred-arc mode, the plasma is generated between two electrodes (positive and negative) located inside the device, which is usually called a plasma torch. In the transferred-arc system, the plasma arc is transferred from the device (commonly connected as the negative) to an external electrode, which usually takes the form of the material to be processed (e.g. a molten bath).

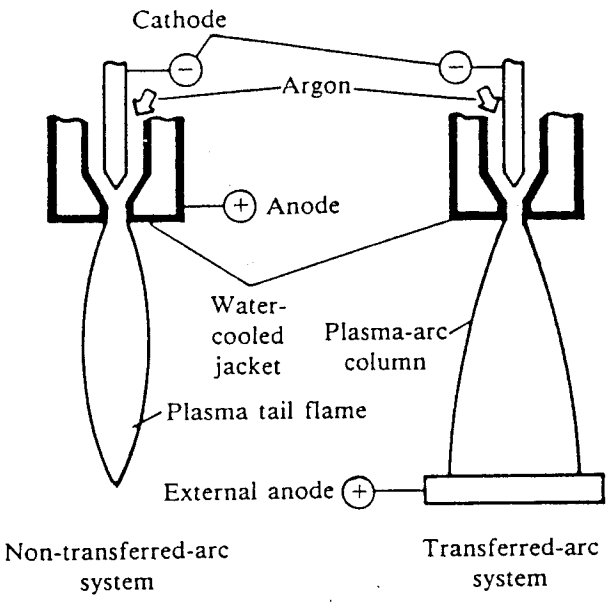

Fig. 1. Schematic of non-transferred-arc and transferred-arc systems

3.1. The Non-transferred-arc Plasma System

Non-transferred-arc plasma devices were developed originally from arc gas heaters and are typified by the Westinghouse arc gas heater[1] (Fig. 2). The arc heater consists basically of a closely spaced pair of tubular water-cooled copper electrodes within which an electric arc is magnetically rotated at extremely high velocities. Process gas is injected through the gap between the two electrodes and drags the arc to the interior of the arc chamber, while the superheated gas is directed into the process. Another example of the non-transferred-arc system is the SKF plasma generator[2] (Fig. 3).

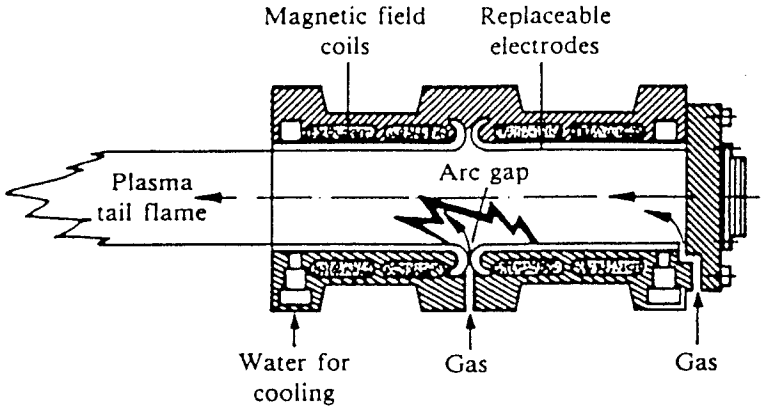

Fig. 2. Schematic of Westinghouse arc heater[1]

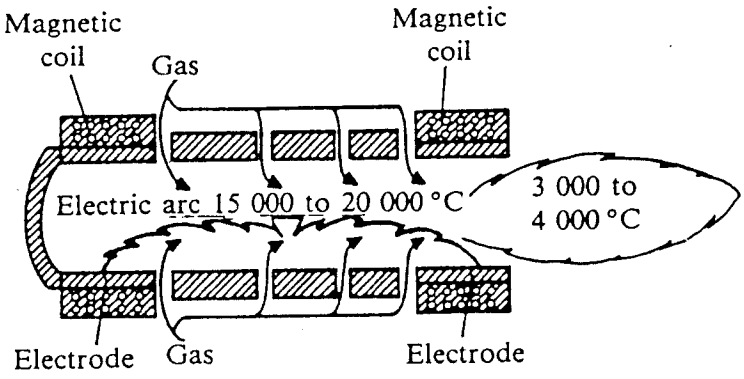

Fig. 3. Schematic of SKF tubular arc heater device[2]

3.2. The Transferred-arc Plasma System

The process material forms an integral part of the electrical circuit in Transferred-arc systems, which normally operate from a d.c. electrical power supply. The electrode commonly forms the cathode (negative connection), and the bath to which the arc is transferred is the anode (positive connection). The cathode device can be of the water-cooled copper-torch configuration, or it can consist of a hollow graphite electrode.

This system shows great potential for application to a number of metallurgical reactions because the intensive thermal energy is most effectively directed at, and transferred to, the material it is

processing. Examples of transferred-arc plasma devices are the plasma torches of the Plasma Energy Corporation[3] (Fig. 4) and Tetronics Research and Development Ltd[4] (Fig. 5).

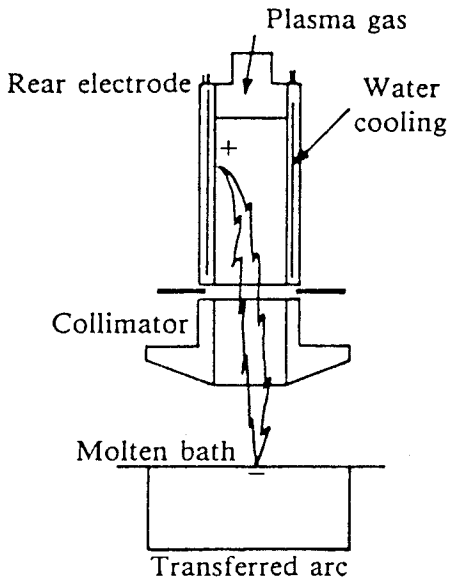

Fig. 4. Plasma Energy Corporation's transferred-arc torch with tubular electrode[3]

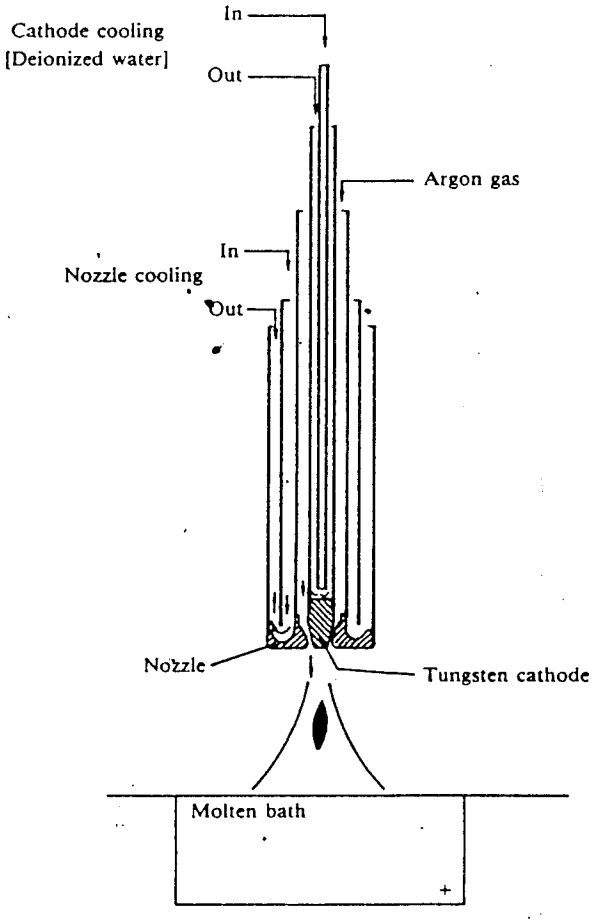

Fig. 5. T.R.D.'s water-cooled transferred-arc torch with rod cathode electrode[4]

4. PROCESSES

A large number of metallurgical processes have been carried out in a variety of laboratory and industrial plasma furnaces. Plasma applications in metallurgy were recently reviewed by Barcza and Stewart[5] and by Reid[6]. Most of these furnaces are essentially electric-arc furnaces in which the carbon electrodes have been replaced by one or more plasma torches and, consequently, the conventional electric arcs have been changed to plasma arcs by the use of controlled input of gas.

Plasma-arc technology offers a potential alternative method for some processes that are traditionally carried out in electric-arc and submerged-arc furnaces. The plasma furnace possesses specific advantages over conventional furnaces, and is being employed commercially in applications in which use can be made of these advantages. Nevertheless, the potential advantages of plasma technology have not been realized fully, and are still being explored. For instance, the throughput of a plasma furnace can be higher than that of a conventional furnace because of the higher power densities that can be achieved; hence the same throughput can be achieved by a plasma furnace that is much smaller than a conventional system. In contrast to conventional furnaces, most plasma furnaces can process fine feed material directly without prior agglomeration, and can use less-expensive coal fines as the reducing agent in smelting processes. In addition, metal containing lower concentrations of oxygen can be produced because air is substantially excluded from the system as a result of the introduction of the plasma gas, and low carbon levels can be maintained because the graphite electrodes used in plasma furnaces are usually at a sufficient distance from the melt.

5. MINTEK'S PLASMA FACILITIES AND GENERAL FURNACE-DESIGN PHILOSOPHY

Four d.c. transferred-arc plasma furnaces rated respectively at 50 kVA, 100 kVA, 200 kW, and 3,2 MVA have been installed in the pilot bays at Mintek. These furnaces have the same basic configuration, although they differ in size and design details.

A schematic diagram of Mintek's 100 kVA furnace is shown in Fig. 6. The furnace, which has been described previously[7], comprises a 100 kVA d.c. power supply, a hollow graphite electrode (cathode) provided with a gas supply, a refractory-lined steel shell, a flat roof with a refractory lining, and three cylindrical steel anodes projecting through the refractory hearth. The furnace is operated typically at 70 kW (90 V, 800 A) at arc lengths of between 50 and 150mm. Argon and nitrogen are used as the plasma gas at flowrates between 5 and 15 ℓ/min. In the numerous smelting campaigns carried out in this facility, the furnace was tapped every 1 to 2 hours.

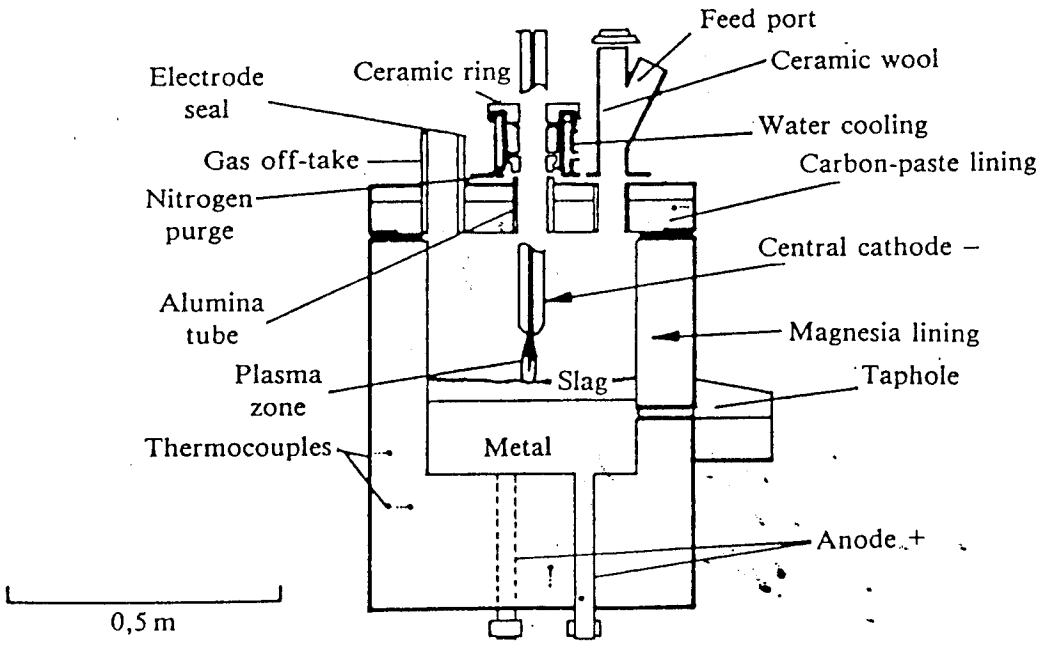

Fig. 6. Mintek's 100 kVA d.c. transferred-arc furnace

By 1981, Mintek's involvement in plasma processes had reached the stage where it was necessary for the d.c. transferred-arc furnace to be proved at the pilot scale. It was then decided that a 3,2 MVA furnace should be built, since it would provide useful scale-up data for industry at the 1 to 2 MW power levels.

The criteria for refractory design were based rather on the proving of the thermal efficiency of this type of reactor than on the adoption of the approach involving high throughput versus high heat loss, which is used in current open-arc technology. The details of the refractory lining are shown in Fig. 7, which indicates the use of substantial insulating material, particularly in the furnace hearth.

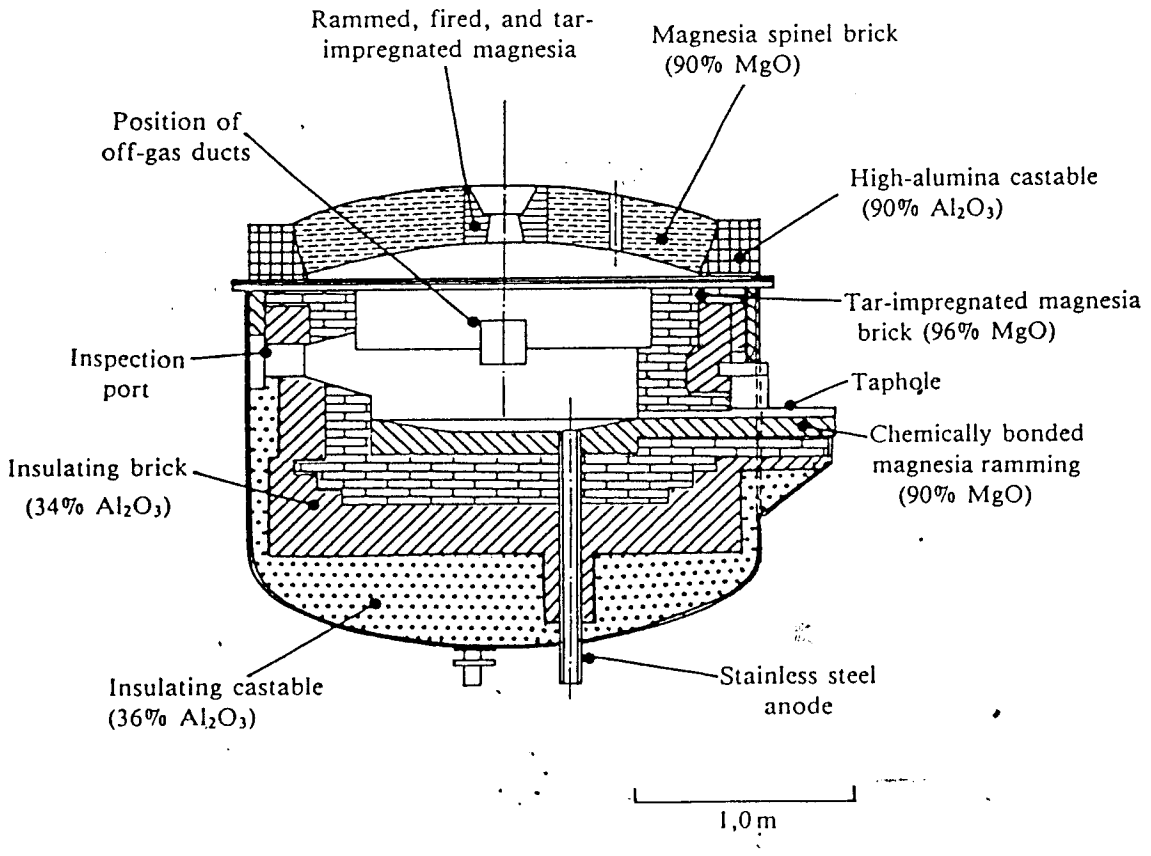

Fig. 7. Original lining of 3,2 MVA plasma furnace

The respective average projected temperatures for the side wall and the hearth shell were 120 and 140°C for heat flows of 11,0 kW per metre of side-wall height and 1,0 kW per square metre of hearth. During the final stages of the commissioning run in May 1983, hot spots were noticed around the gas off-takes. It was later confirmed that these hot spots had developed because the brickwork in this area had collapsed.

Subsequent examination of the lining indicated that much of the insultating material behind the hot-face magnesia brick had fused (Fig. 8), resulting in the destabilization of approximately one-third of the hot-face lining.

Fig. 8. Photograph showing fusion of insulation and resultant collapse of hot-face brickwork

At that stage, successful testwork on the smaller 100 kVA scale had led to the realization that a high-power, high-throughput operation was necessary for reliable furnace performance in smaller vessels with a more conductive lining. The philosophy is similar to that used in the design of ultra-high power (UHP) steelmaking furnaces, i.e. that extra losses of heat energy are more than compensated for by high throughputs and short turn-around times, provided that it is borne in mind that the plasma operation is essentially not a batch process except for the intermittent tapping.

It was also noted that substantial thermal shock damage (spalling) had occurred in the hot face brickwork in the upper sidewalls. The 3,2 MVA furnace was subsequently relined with a hot-face of chromate bonded magnesia ramming, but subsequent courses of direct-bonded magnesia-chromite and magnesia ramming were used as the safety lining in the sidewalls. Details of the lining are given in Fig. 9.

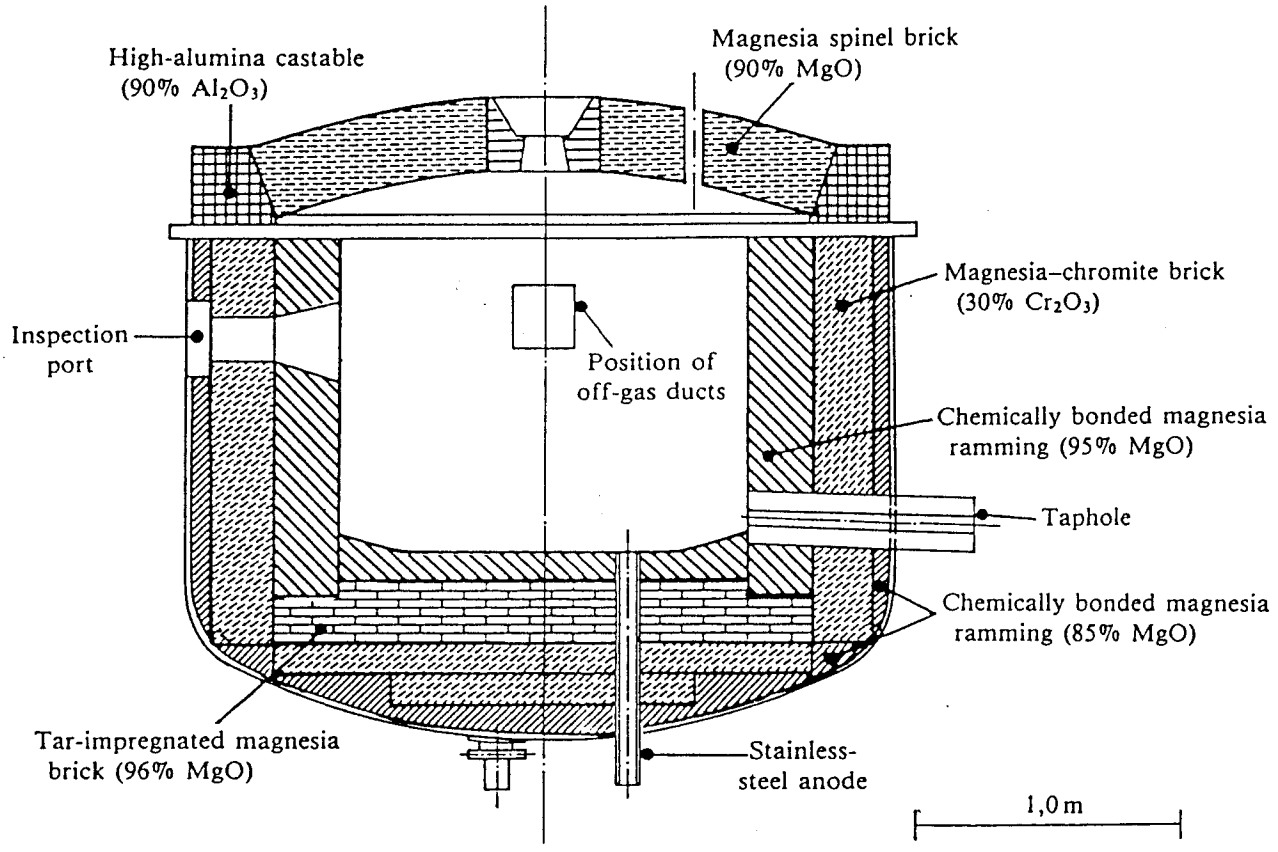

Fig. 9. Details of revised lining for 3,2 MVA plasma furnace

By then, the design temperature for the shell had risen to 258°C for a much higher heat loss of 38 kW per metre of side-wall height. Similarly, the temperature of the hearth shell was predicted as being 160°C for a heat loss of 1,4 kW per square metre of hearth-shell area. However, side-wall temperatures were not considered to be high enough to warrant the use of water cooling. A 10-day smelting campaign was carried out with the above lining strategy in which some 85 tons of slag and metal were tapped at an average tapping temperature of 1650°C. Average lining wear of the side-wall refractory was subsequently measured and found to be 30 mm, and no evidence of damage due to thermo-mechanical stress.

Recent process-chemistry testwork was centred on the 200 kW furnace illustrated in Fig. 10. This furnace uses the same power supply as the 3,2 MVA furnace, and therefore it can be used in operations to test whether higher power densities can be used.

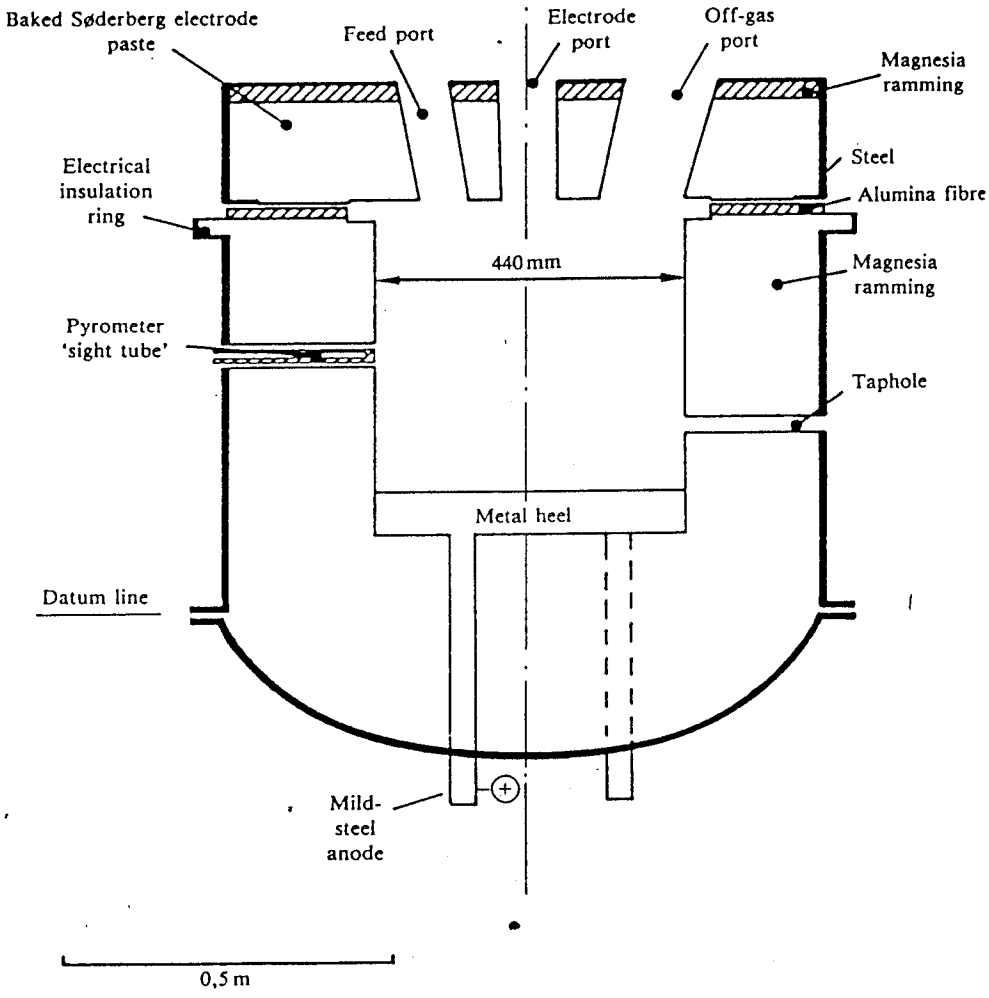

Fig. 10. Schematic arrangement of 200 kVA furnace

6. SPECIFIC REFRACTORY PROBLEMS ENCOUNTERED AT MINTEK AND HOW THESE WERE OVERCOME

The specific problems related to refractories can be classified in terms of their location in the furnace and their origin, i.e. electrical, chemical, or thermo-mechanical. These are summarized schematically in Fig. 11.

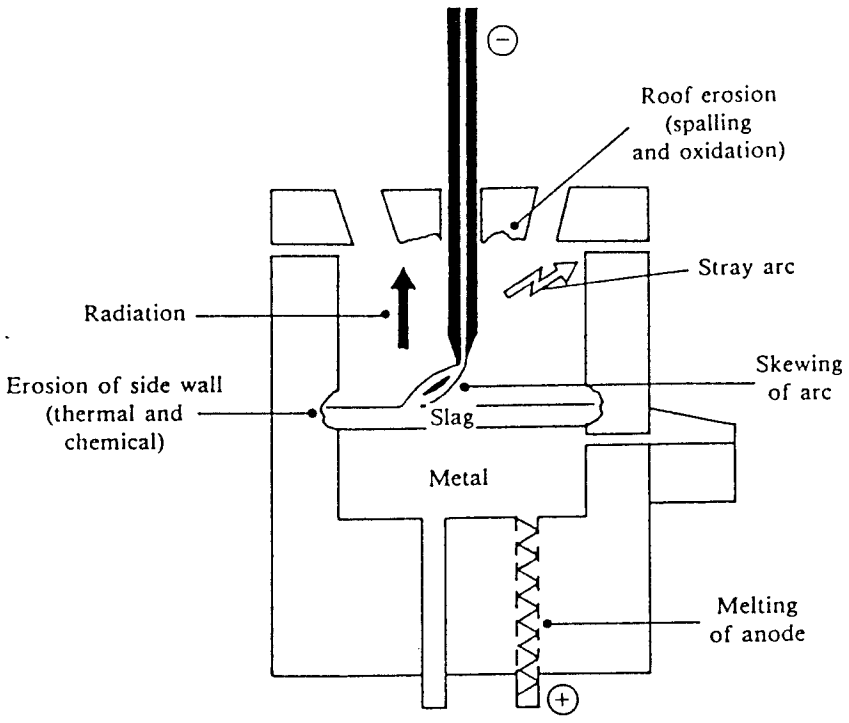

Fig. 11. Refractory problems encountered in a d.c. transferred-arc plasma furnace

Electrical problems include melting of the anode, stray arcing to the shell, and arc instability leading to hot spots at the side wall. Chemical erosion is encountered at the side wall, specifically in the region of the slag-metal interface.

Refractory wear in plasma-furnace roofs is due mainly to high-temperature fluxing and to the high thermo-mechanical loads imposed by the high levels of upward reflected radiative heat energy.

6.1. Anode Melt-down

Several configurations are possible in the hearth of a d.c. transferred-arc plasma furnace. Perhaps the most vulnerable configuration is that in which one or more steel anode bars are embedded in the hearth refractory to provide the necessary electrical contact with the molten bath. The following are possible disadvantages of this system.

(a) The arc becomes attached to one particular anode, causing rapid melt-down of that anode and the break-out of slag and metal from the furnace. Once a run through has occurred, refractory damage in this area precludes the insertion of a new anode bar.

(b) To prevent melt-down after tapping of the furnace, a residual metal heel must remain in the furnace at all times. This heel can cause concentration or dilution effects in the tapped material, and generally restricts the ability for process-chemistry variables to be changed during a campaign.

Alternative hearth designs have been adopted by ASEA[8,9] of Sweden and Didier[10] of West Germany. These involve the use of an electrically conducting refractory hearth. The ASEA design is shown schematically in Fig. 12.

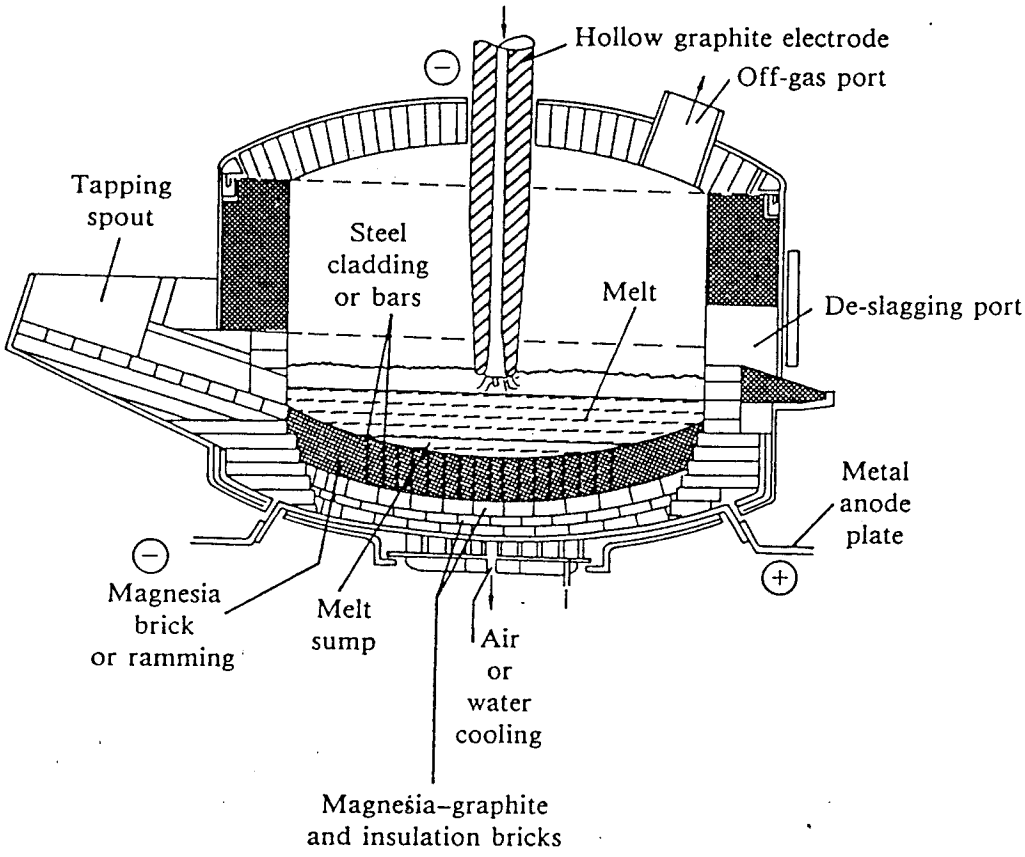

Fig. 12. The ASEA furnace[9]

The upper course consists of high-fired magnesia brick with metal cladding on two faces. The cladding allows electricity to be conducted to the lower courses, which consist of alternating layers of graphite and insulation brick. This combination allows for a continuous conducting path to the air- or water-cooled anode plate, and minimizes heat losses

from the furnace hearth. However, this is a complex design, which must allow for the exact matching of joint tolerances and thermal expansion to avoid the opening-up of joints, leading to metal penetration or loss of electrical continuity.

The Didier design also uses metallic conductors, but in the form of metal rods connected to an external steel plate attached to the underside of the furnace. As with the ASEA design, the hearth refractory consists of successive layers of graphite-containing refractory, with a working hearth of magnesia-containing chromic oxide.

The concept of a conducting hearth was also adopted by Mintek, but simpler hearth designs were used that require the use of only one refractory. Two different designs were tested successfully on the 100 and 200 kW furnace facilities.

6.1.1. Extended collector-plate type hearth

The first type of hearth is a hybrid that utilizes metallic conductors but not electrically conducting refractories. It is shown schematically in Fig. 13.

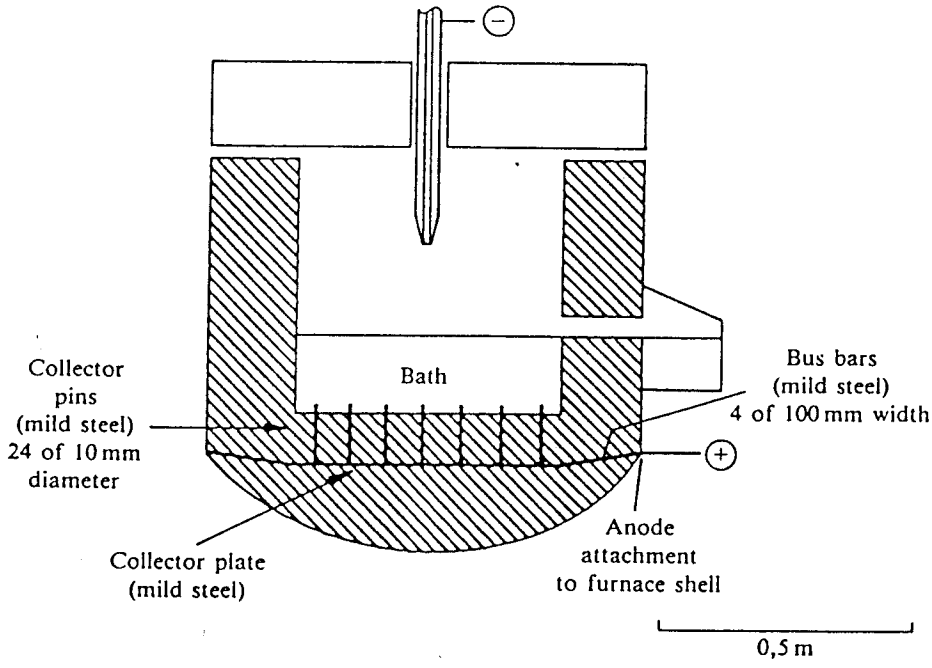

Fig. 13. Extended collector-plate type conducting hearth

A circular steel collector plate, to which 20 to 30 steel collector pins are welded, is embedded in a rammed hearth that can be of magnesia or alumina material. The collector pins penetrate to the bath of molten metal, and have a total cross-sectional area designed to carry more than the full current

pins are selected so that the energy flow by thermal conduction will be restricted in the hearth area directly beneath the arc-attachment zone. This limits the flow of energy that the collector plate is required to dissipate so that reasonable temperatures can be maintained. The internal metal collector plate then distributes the thermal load and collects the current load from each pin. It should be noted that the anode attachment is made directly to the furnace shell at the lower side wall, which further minimizes the possibility of metal run-out.

This design differs somewhat from that proposed by Didier, where the metal rods in the furnace hearth provide the necessary electrical connection between the metal bath and a graphite sub-hearth, which is in contact with the external collector plate attached to the furnace bottom.

Several smelting trails were carried out successfully by the use of this configuration at currents of over 1000 A and power densities up to 0,6 MW/m^2. Chromate-bonded magnesia ramming was used as the hearth refractory.

Little or no damage to the collector plate was observed after completion of the runs. Perhaps this was to be expected since any collector pin will tend to re-solidify as the arc attachment moves to favour other collector pins. Even if inadvertent over-powering of the furnace should occur, there is little chance of a furnace break-out with this design of anode contact with the bath.

6.1.2. Conducting refractory hearth

The second type of conducting hearth uses electrically conducting resin-bonded magnesia-graphite refractories. These refractories are in the form of a rammable for the small-scale 'pot-test' and 100 kVA furnaces or interlocking bricks with an integral collector-plate design for the 200 kW furnace (Figs. 14 and 15 respectively).

Only one type of conducting refractory is used in the bricked conducting hearth without any steel cladding, thus giving improved joint tightness.

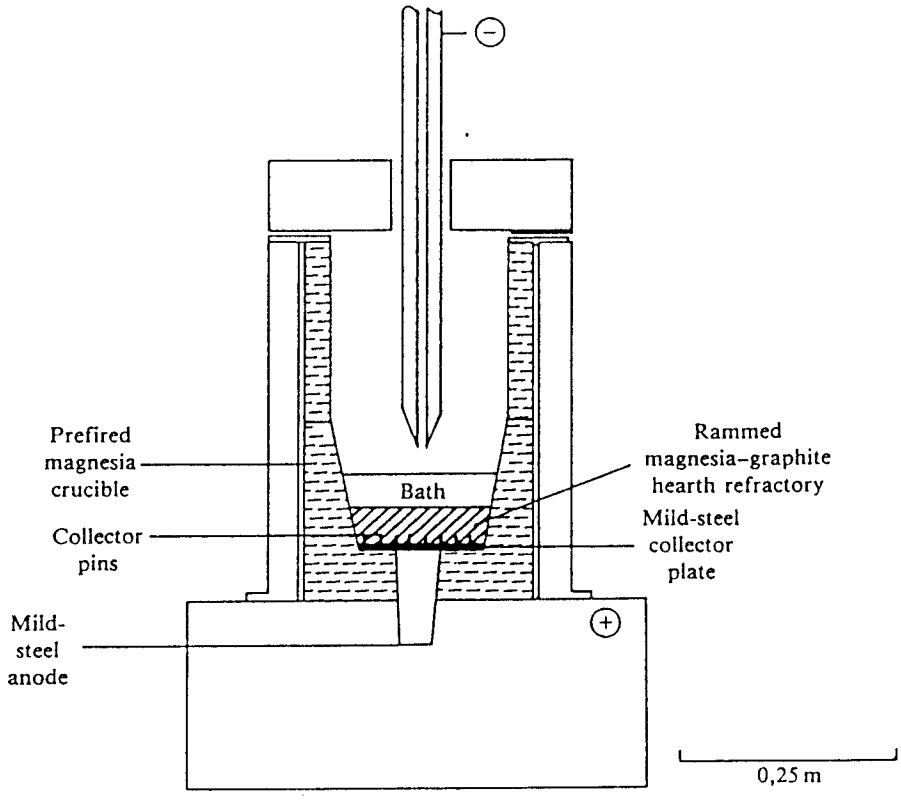

Fig. 14. Conducting refractory hearth for small-scale 'pot-test' operation

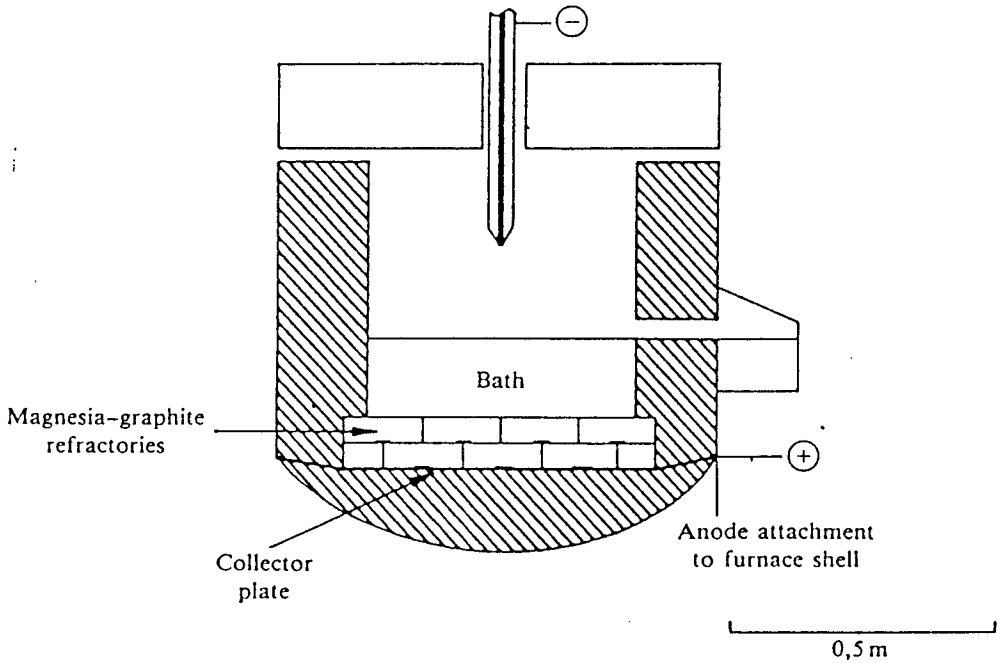

Fig. 15. Magnesia-graphite bricked conducting hearth

Electrical properties. The excellent combination of properties that can be achieved by the introduction of substantial proportions of flake graphite as a matrix component in magnesia-based refractories is well-documented[11-14]. However, although these properties are of relevance in a conducting hearth refractory, it is the electrical properties imparted by the graphite which are the most important, and the graphite flakes must be distributed so that a continuous network is formed in the brick matrix (Fig. 16).

Fig. 16. The optical microstructure of magnesia-graphite conducting hearth refractory. The continuity of the graphite network (G) around the grains of periclase (P) can be seen

Electrical continuity is ensured by maximization of the number of graphite particle-particle contacts. This is achieved by the use of a fine graphite particle size (typically 50 per cent smaller than 75μm), which gives a high ratio of surface area to volume, and a mixing technique that results in the coating of individual magnesia grains with a layer of graphite flakes.

In order that the conductivity of these materials could be assessed, the electrical resistivity of rammed and cured specimens of 150mm length and 50mm diameter were determined. A simple measuring technique was used, which had been developed for the determination of the electrical resistivity of electrode paste[15]. The measurements obtained on fused grain magnesia-graphite materials containing up to 40 per cent graphite are shown in Fig. 17.

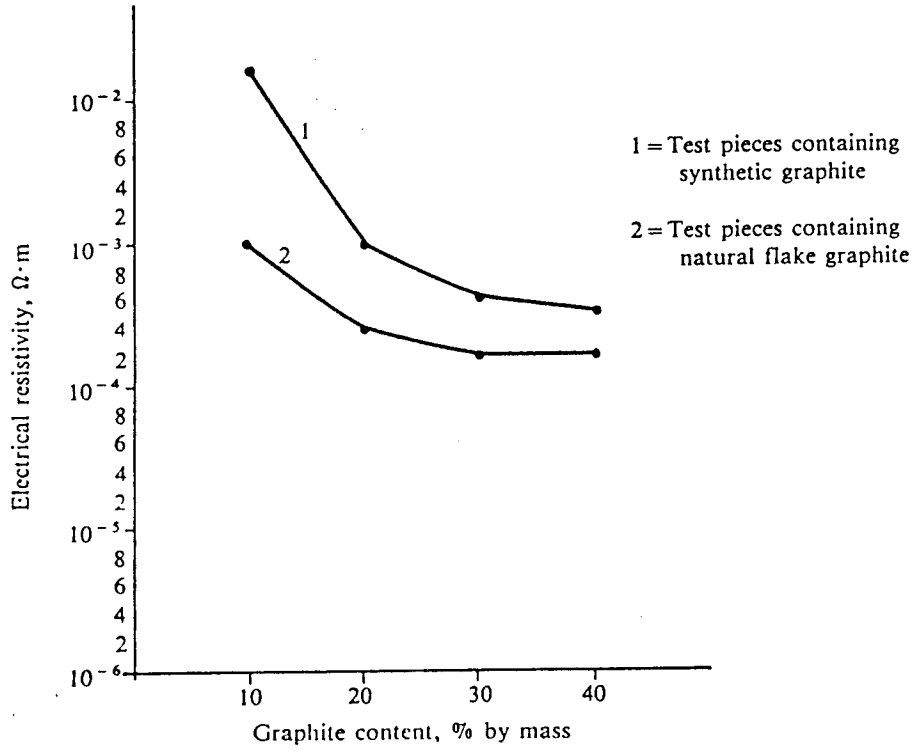

Fig. 17. Electrical resistivity versus graphite content for materials containing natural flake and synthetic graphites at room temperature

As expected, the electrical resistivity of magnesia-graphite materials decreases with increasing graphite content, irrespective of the type of graphite used. However, a saturation level is reached when the graphite content is above approximately 30 per cent, i.e. when the minimum number of electrical contacts required to realize the maximum possible conductivity in the matrix is achieved.

At equivalent graphite contents, natural flake graphite is

apparently marginally more effective as a matrix conductor than 'synthetic' graphite (ground electrode stubs), possibly because of its greater degree of graphitization as the theoretical atomic-packing density is approached.

Compatibility with process chemistry. One reservation regarding the use of carbon-containing refractories in the hearth of a plasma furnace is the dissolution of carbon in the metal or alloy in the bath. This problem is particularly relevant during the smelting or refining of low-carbon ferro-alloys, and is the reason why the use of graphite alone as a hearth material is avoided.

The likelihood of carbon pick-up from the graphite was evaluated in a series of 10kg pot-test experiments in the small-scale pot-test reactor (Fig. 14). Table 1 gives the chemical analysis of silico-manganese, medium-carbon ferromanganese, and silicon fines as received, and after remelting. A magnesia-30 per cent graphite hearth was used.

TABLE 1

Analyses of fines as received and after remelting. Composition, % by mass

		Si	Mn	Fe	C	Cr	Ca
Fe-Mn-Si fines	As received	15,4	65,0	13,3	1,8	-	-
	Remelted	16,5	67,9	14,2	1,8	-	-
Medium-C Fe-Mn fines	As received	2,4	80,1	15,5	1,4	-	-
	Remelted	2,7	79,2	15,7	1,4	-	-
Si fines	As received	95,7	0,09	0,86	0,14	0,02	0,23
	Remelted	97,0	0,04	0,85	0,10	0,06	0,06

No pick-up of carbon occurred in any of the remelted alloys, and the silicon fines were even refined slightly. This indicates the suitability of this type of hearth for these remelting operations.

On the larger 100 kVA scale, successful chromite-smelting trials lasting many days were carried out using a rammed hearth containing 30 per cent graphite. Further trials are in progress in the larger 200 kW furnace using the bricked version as a preliminary stage so that the suitability for scale-up can be assessed.

Initial results from these trials, which involved the remelting of DRI, have indicated that power densities of 2,0 MW/m^2 and above, at feed rates exceeding 500 kg/hr, are possible with the bricked hearth design.

Use of alternative materials. Other materials are being investigated for use as electrically conducting hearth refractories both as the bulk-refractory oxide phase as well as the matrix-conducting phase. These include alumina and partially stabilized zirconia as the oxide phase, and finely ground ferro-alloy fines as the conducting phase.

Fig. 18 presents the results of electrical-restivity tests that were done at temperatures up to 1500°C under argon on a fused-grain magnesia-26 per cent graphite material, a commercial alumina-26 per cent graphite brick, and a fused-grain magnesia-35 per cent ground ferrochromium fines material.

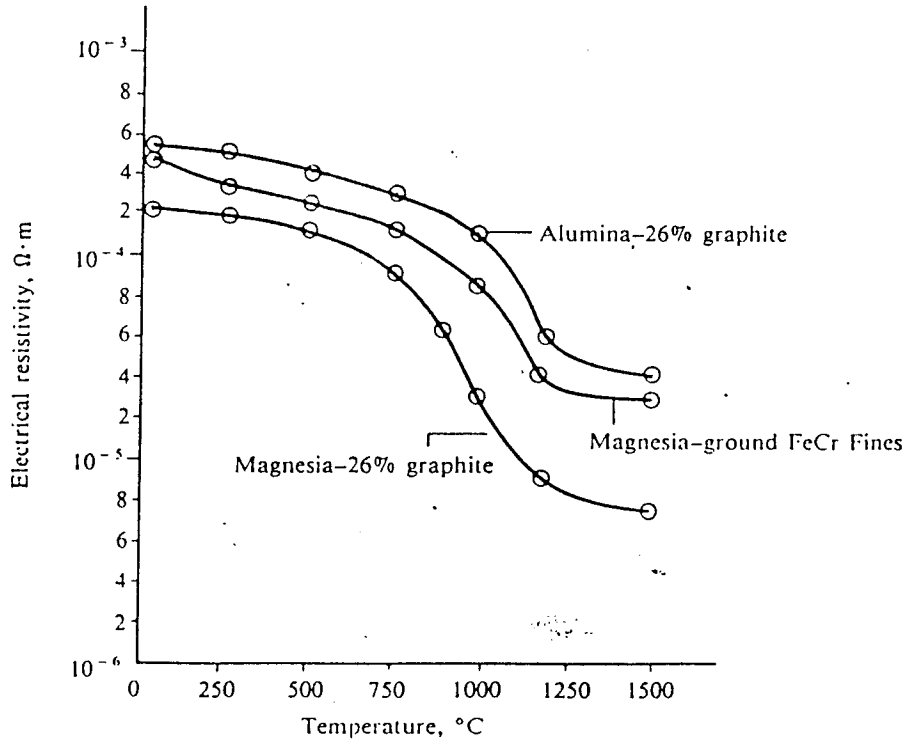

Fig. 18. Electrical resistivity versus temperature for magnesia-graphite, alumina-graphite, and magnesia-ground ferrochromium materials

All three curves have a characteristic shape, which is similar to that for semi-conductors. A rapid decrease in resistivity occurs above about 750°C, followed by a flattening-off above 1150 to 1200°C. This is believed to be due to carbonizing of the phenolic resin bond that is common to all three materials, since materials of similar composition with a non-carbon yielding bond (e.g. Calgon) do not exhibit this type of curve and, in fact, exhibit little change in restivity over the whole temperature range.

Also, the resistivity values on cooling did not follow the heating-up curve and showed only a slight increase in resistivity when cooled to room temperature. It would appear that, as the resin carbonizes, the electrical contact between the graphite flakes improves, and continues to improve until carbonization is complete at 1150 to 1200°C. This indicates the importance of resin content and quality (i.e. carbon yield) in electrically conducting refractories of this type. In general, these results show that many combinations of oxide phase and conducting-matrix phase are possible, and can be matched to particular process-chemistry requirements. This is particularly important when the conducting matrix phase is deliberately made metallic because, if the purity of the material in the brick matrix is equal to, or higher than that of the molten metal or alloy in the bath, contamination due to dissolution of the refractory matrix can be avoided. For example, it is highly necessary for the formation of extremely stable carbides in titanium alloys to be avoided, since even very small quantities of dissolved carbon from a graphite matrix may make it difficult for alloy specifications to be met.

6.2. Stray Arcing

A phenomenon that has been encountered in the d.c. transferred-arc furnace is 'stray' arcing, in which arcing from the cathode is directed to the furnace shell via the roof components instead of to the anode via

the bath (Fig. 11). Stray arcing often occurs when the feeding of the raw materials begins, which effectively increases the arc resistance. This is obviously not desirable, since it results in over-heating of the furnace shell and a loss of power input to the molten bath.

A more serious effect of stray arcing occurs when it is directed to a water-cooled plasma torch, since it can cause holing of the outer water-cooled copper tube with subsequent leaking of water into the furnace.

At Mintek the problem of stray arcing to the roof was overcome mainly by electrical means and partly by changes in refractory design. The electrical method involved electrical insultation of the roof from the furnace itself. Hence, the roof shell is allowed to rise electrically to a potential that could be of the order of 110 V for the 200 kW furnace.

Safety precautions are necessary to prevent personnel from accidentally contacting the roof while working on the furnace. The change in refractory design involved the development of a water-cooled electrode seal or 'stuffing box', which physically isolates the electrode from the roof shell (Fig. 19).

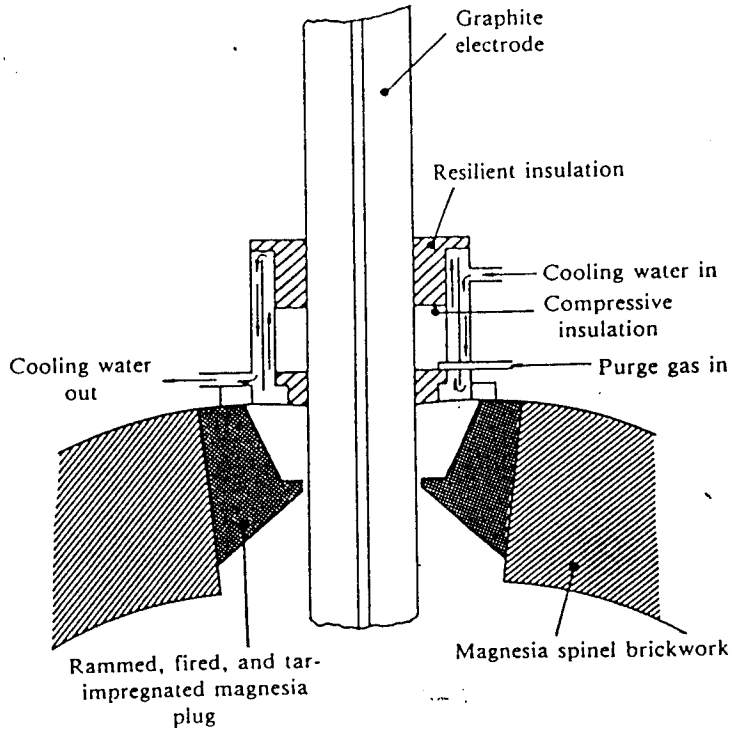

Fig. 19. Schematic arrangement of electrode seal and refractory plug

Nitrogen is forced into the furnace and passes over the surface of the hot electrode. This has the added advantage that the ingress of air is suppressed and, hence, the oxidation of the graphite is reduced. The refractory plug on which the seal is seated consists of a rammed and fired 95 per cent magnesia material, which was impregnated with tar and coked. At first, a 90 per cent alumina castable was tried, but this could not withstand the thermal shock resulting from the high levels of radiative heat energy reflected from the surface of the bath.

The stray arcing associated with the water-cooled plasma torch has been overcome successfully by the installation of graphite sleeves round the outer copper tube[16] (Fig. 20).

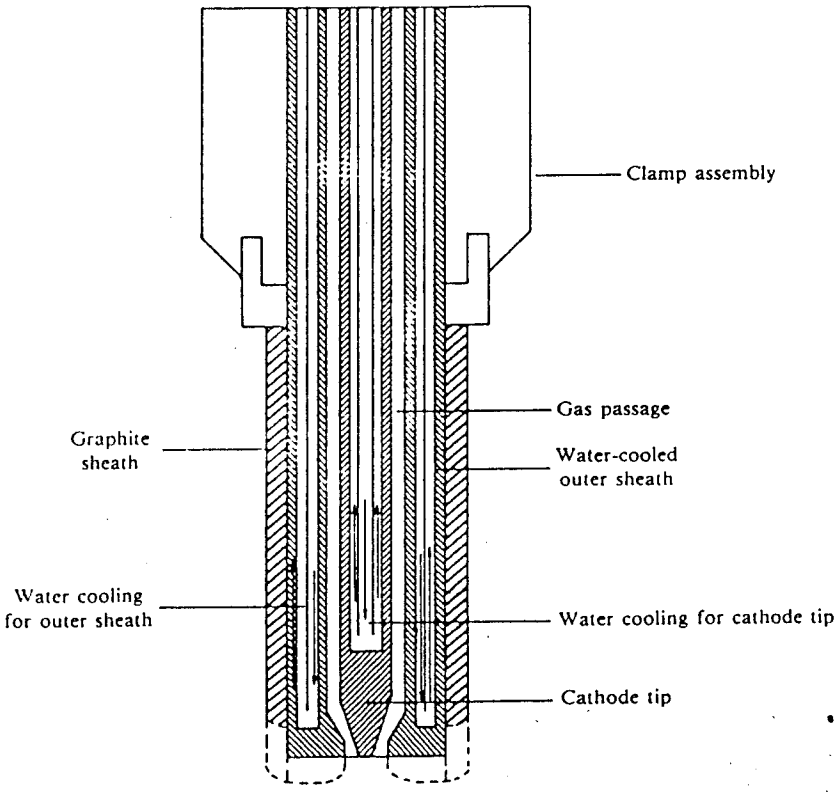

Fig. 20. Water-cooled plasma torch with protective graphite sleeve[15]

The choice of graphite is possibly surprising at first, in view of its high conductivity. However, insulating ceramics like alumina or zirconia cannot be used because of the tremendously high thermal gradients through the sleeve, which can be as high as 1700 to 1750°C over a radial thickness of 10 to 20mm. The alternative approach is the use of a sleeve that is highly electrically conducting and the provision of a dispersed current path back to the water-cooled copper tubes so that the arc does not attach directly onto the copper. Graphite is the only material currently available that can meet both requirements, i.e. electrical conductivity and resistance to thermal shock. Open-arc experiments with this design failed to induce any damage to the torch due to stray arcing, even when the stray arc was deliberately introduced to the graphite sleeve as a dead short.

6.3. Arc Flare

In d.c. single-electrode (or water-cooled plasma-torch) systems, the problem of 'arc flare' has been eliminated largely by the use of a centrally located electrode and by gas stabilization of the plasma column.

However, if skewing of the arc is allowed to take place at the bath surface, energy transfer can be directed towards the side wall of the furnace, where rapid localized erosion of the refractories can occur (Fig. 11). Several conditions can lead to skewing of the arc-attachment point, e.g. the use of extended arcs, insufficient flow of gas, unsuitable geometry of the electrode tip, and asymmetrical electrical connections at the anode and the cathode where electromagnetic interactions with the plasma column will force it away from a centralized position. In larger furnaces these conditions can be

remedied to a certain extent by a sound engineering approach and the control of process variables. However, in small-scale reactors, where the critical distance between the electrode tip and the side wall is much shorter, even slight exposure of the side walls to arc flare can result in severe refractory damage.

This problem was largely overcome at Mintek by the use of selectively placed water-cooled panels used in conjunction with refractories of high conductivity, and by careful attention to electrode-tip geometry. An example is given in Fig. 21, which shows a reactor of pot-test scale with an enclosed cooling jacket of the helical-coil type, a rammed resin-bonded magnesia-graphite refractory, and a machined 'pencil-point' electrode tip.

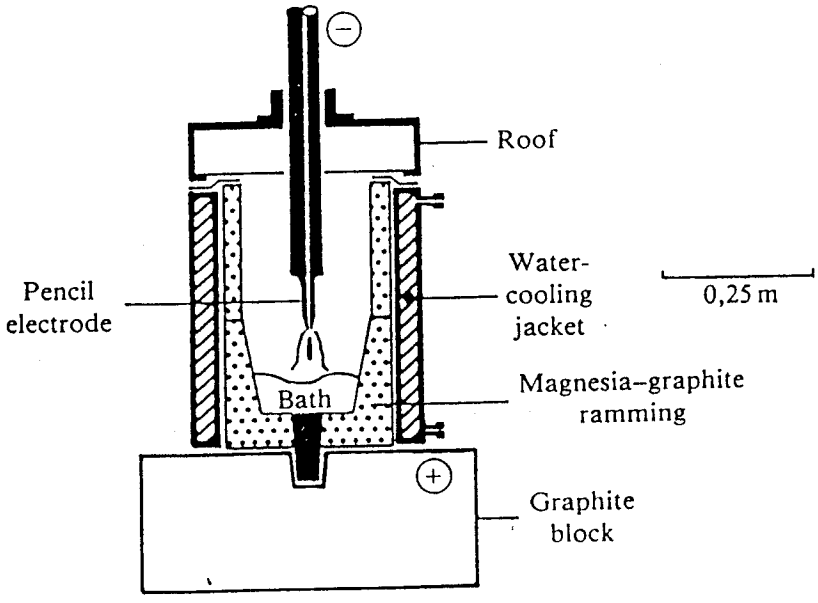

Fig. 21. Pot-test reactor with water cooling and pencil-point electrode tip

Successful trials were carried out with this system, up to ten individual experiments being carried out with a single rammed lining

with negligible fettling. Previously, a prefired 95 per cent MgO-magnesia crucible was used in each experiment.

The pencil-point electrode tip ensures that the arc attachment at the cathode is confined to a limited surface area at the tip, and cannot wander around the periphery as it does with an electrode of larger diameter. Typically, the electrode tip has a diameter of 15mm and a central hole of 5mm, whereas the standard electrode used up to 200 kVA level has a diameter of 50mm and a central hole of 10mm. The smaller central hole requires that higher gas velocities should be generated to maintain a similar gas flowrate. The higher gas velocities also help to centralize the arc. The use of water-cooled magnesia-graphite materials is discussed in more detail in a later section.

6.4. Chemical Erosion of Side-wall Refractories

Although chemical erosion can be discussed as an individual mechanism of refractory wear, it is usually associated with, and worsened by, the arc-flare problem discussed above. Consequently, the methods used for the reduction of wear due to chemical erosion are similar to the methods that can be used for the minimization of damage due to arc flare. In addition to selective water-cooling of the side-wall refractories, raw materials can be fed selectively into the furnace around the side walls, particularly into hot-spot regions, to modify the composition of the slag locally and to increase the viscosity of the slag. This limits the ability of the slag to penetrate into the open pores of the refractory hot face.

Although chemical erosion is generally due to chemical interations between the slag and the refractory phases, it can also be a direct result of the reduction of the oxide refractory by silicon, titanium,

aluminium, and carbon species that are dissolved in the alloy, as was realized when inconsistent silicon levels were obtained during the smelting of certain ferro-alloys. This inconsistency was invariably associated with severe magnesia refractory erosion and a brilliant white flame at the exhaust port. The erosion was in the form of under-cutting or notching, and comprised up to 80 per cent of the original refractory thickness over a side-wall depth of only 10 to 20mm. Upon analysis, the condensed fume, which had rapidly blocked the off-gas port, was cound to contain over 90 per cent MgO, which confirmed that the intense white flame was associated with the combustion of magnesium-metal vapour.

Some of the possible reduction reactions taking place in the furnace are shown below.

$$MgO_{(ref)} + Si \rightleftarrows SiO_{(vap)} + Mg_{(vap)}, \quad (1)$$

$$MgO_{(ref)} + \tfrac{1}{2}Si \rightleftarrows \tfrac{1}{2}SiO_{2(slag)} + Mg_{(vap)}, \quad (2)$$

$$MgO_{(ref)} + \tfrac{1}{2}Si + CaO_{(slag)} \rightleftarrows \tfrac{1}{2}(2CaO.SiO_2)_{(slag)} + Mg_{(vap)}, \quad (3)$$

and $$MgO_{(ref)} + C \rightleftarrows CO_{(vap)} + Mg_{(vap)}, \quad (4)$$

where the subscripts ref and vap refer to the refractory and the vapour respectively.

Plots of the change in free energy as a function of temperature for these reactions (based on one unit mole of magnesium vapour) are plotted in Fig. 22.

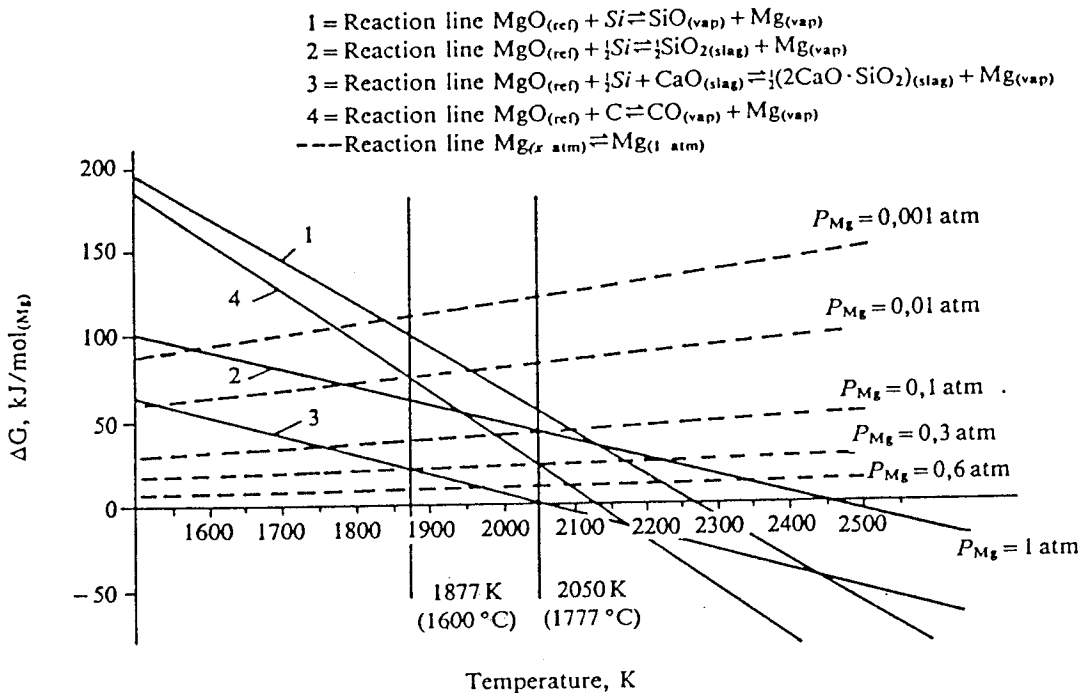

Fig. 22. Free-energy diagram for the reduction of MgO by carbon or silicon (Data from Barin and Knacke[17])

This simple thermodynamic approach indicates that, at a bath temperature of 1600°C, none of the reactions are favoured, because a positive change in free energy is indicated. However, at a temperature of 1777°C, the reduction of magnesia by silicon in the presence of CaO to form magnesium vapour and dicalcium silicate is feasible (reaction 3). In the absence of CaO, or where silicon monoxide is formed, the minimum reaction temperatures are much higher, i.e. 2177 and 1997°C for reactions 2 and 1 respectively. Significantly, the carbon-reduction line (4) is the next most favourable, a minimum temperature of 1857°C being required. At temperatures above 1907°C, reduction by carbon becomes more favourable than reduction by silicon.

It will be noted that all the above reactions involve the formation of one or more gaseous products, and a magnesium partial pressure of 1 atmosphere. Where one or both of the partial pressures of these species

are lower than 1 atmosphere, the equilibrium will be shifted to the right of the equation. One effect of this is that the reaction becomes thermodynamically feasible at a lower temperature. Lines reflecting the change in equilibrium for reduced magnesium partial pressure are also shown in Fig. 22.

During the reduction of metallic oxides with carbon, carbon monoxide is generated. This gas, together with the plasma gas nitrogen or argon, lowers the partial pressure of the magnesium vapour in the furnace atmosphere. If the partial pressure is lowered, say to 0,3 atmospheres, reduction reaction 3 will be thermodynamically feasible at only 1592°C. This is in accord with observations made during the furnace campaigns, i.e. that maximum refractory erosion is associated with 'stewing' of the bath, little slag cover, and with no feed entering the furnace. In this instance, the magnesium vapour can be swept away by other furnace gases; hence, a decreased partial pressure is maintained, and reduction of the magnesia is favoured. If a deep slag cover is present, the total pressure at the metal-refractory interface will be greater than 1 atmosphere and, hence, the partial pressure of magnesium will approach 1 atmosphere. This will result in less favourable conditions for the formation of magnesium.

These findings led to the adoption of modified furnace practice, in which more careful attention to balancing of the feed rate and power input obviates the need for 'stewing' of the melt prior to tapping.

A further development is the use of a freeze lining to prevent the molten slag and metal from contacting the side-wall refractory. A layer of 'frozen' slag can be built up by selective water-cooling of the side walls. The furnace lining then consists, in effect, of resolidified slag. Alternatively, feed material can be added

deliberately in such a way that it enters the furnace in close proximity to the selectively water-cooled side walls. A thin layer of unreacted feed is then built up at the side walls as the level of the bath rises.

Initial work on the pot-test scale was so successful that prefired magnesia and alumina crucibles could be reused several times. Fig. 23 shows a solidified plug of material with a surface coating (freeze lining) of unreacted feed and slag. This plug was removed intact, leaving an untouched refractory surface in the magnesia crucible.

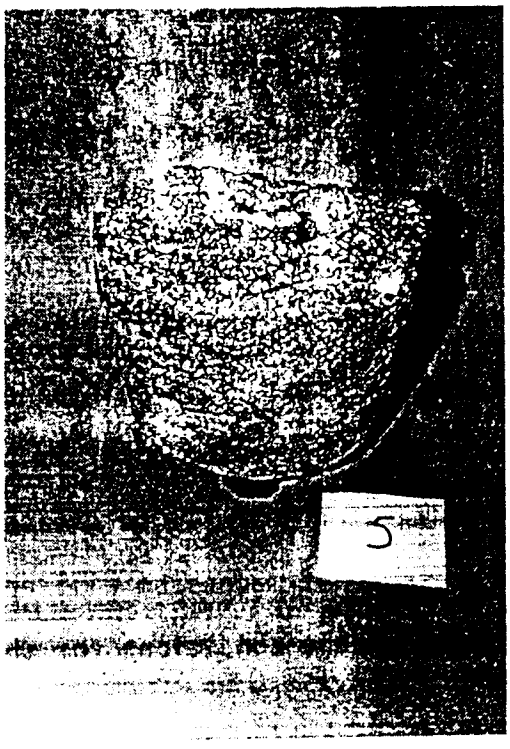

Fig. 23. Solidified plug showing freeze lining of unreacted feed and slag

However, the rate at which heat can be removed from the reactor (which limits the power-input level) is determined largely by the low thermal conductivity of the magnesia , i.e. 3,0 W/m/K.

The thermal conductivities of magnesia -graphite materials are much higher than this[11], typically about 20 W/m/K for a resin-bonded 80 per cent magnesia-20 per cent graphite material, which allows for faster rates of heat removal. The graphite content of these materials imparts other properties that make them suitable for use in a plasma furnace, as follows.

(a) Their resistance to thermal shock is excellent due to a minimal degree of ceramic bonding between the magnesia grains, which retards crack propagation through the refractory. Also, because the graphite matrix is slightly compressible, it can absorb any expansion of the individual magnesia grains.

(b) They have low coefficients of thermal expansion. For instance, the typical percentage expansions of magnesia and magnesia-20 per cent graphite material at 1200°C are 1,6 and 0,6 respectively[12]. The thermal expansions of magnesia and graphite also helps to retard crack propagation during thermal cycling.

(c) Their low wettability by molten phases minimizes the penetration of those phases into the open pores of the hot face.

In addition, where resin or tar bonding is used, low porosity and good hot strength can be achieved without the need for hard firing, which is commonly used for magnesia brick. This feature makes the use of rammed linings in the 10 to 20 per cent graphite range very attractive for smaller furnaces and for furnaces with complex lining designs that preclude the use of preformed shapes.

Encouraging results were obtained with a resin-bonded fused-grain magnesia-20 per cent flake graphite material, which can be rammed *in situ* and requires a curing temperature of only 150°C. The testing of this

material was limited to small-scale experiments in which 10kg of feed material were used, and it was found that up to twelve individual experiments could be performed with the same lining without the need for major fettling. The cooling ability of the lining was improved further by solid-metal cooling fins that were embedded in the refractory.

In conjunction with the research work on these materials, a computer model is being developed that will enable water-cooled refractory systems to be designed for larger furnaces requiring a protective freeze lining. A one-dimensional steady-state heat-flow model enables the design of the cooling panels, and the flowrates, thermal conductivity of the refractories, lining thicknesses, and freeze-lining thicknesses to be specified. The system on which the model is based is shown schematically in Fig. 24.

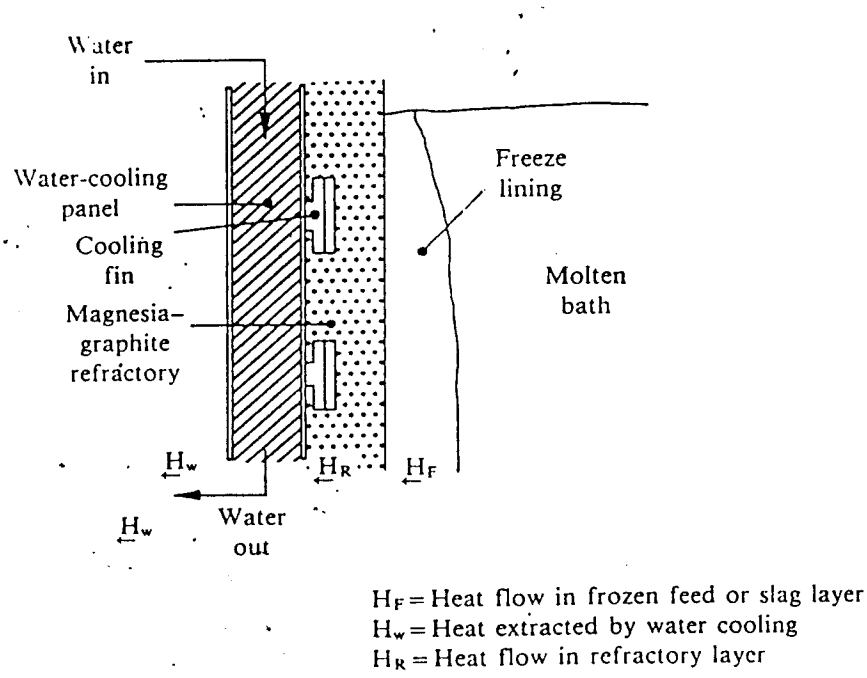

Fig. 24. Schematic representation of the system used in the development of the heat-flow model

This concept can be extended further in the design of slag-covered water-cooled panels at the upper side walls. However, in view of the danger of stray arcing to the panel, where only a thin slag cover is present, it is unlikely that water-cooled panels will be used extensively without a hot-face lining of refractories in d.c. transferred-arc furnaces in the near future.

6.5. Refractory Damage in Plasma-furnace Roofs

Before the plasma facilities at Mintek were developed, a major concern was that the use of long (typically longer than 250mm) column plasma arcs would result in radiation damage to the side walls. In practice, however, the radiation damage was found to be directed rather at the roof by intermittent upward reflection from the bath surface. The amount of radiation reflected to the furnace roof is governed largely by the nature of the process (i.e. whether it involves melting or smelting), the amount of gas produced in the process, the arc length, the distance from the bath surface to the roof, and the amount of feed material on the bath surface.

Several alumina and magnesia castables or rammables were tried in the 100 and 200 kVA furnaces, but heavy spalling and reactions with the slag and gaseous phases in the furnace atmosphere result in poor roof life. Coked electrode paste was tried as an alternative roof material but, although this material could withstand the thermal stresses imposed by the radiation, rapid erosion often occurred in the hottest centre section due to the ingress of air through the various roof ports, particularly where the sealing was inadequate.

The dual requirements of high mechanical strength and a high degree of resistance to thermal shock were met finally by the use of a composite material developed by the use of existing concrete technology. This material is based on a 95 per cent alumina castable, and contains 6 per cent by mass stainless-steel fibres measuring 0,5 by 2 by 25mm, which are produced from a type 304 - 18 per cent chromium, 8 per cent nickel - steel (Fig. 25).

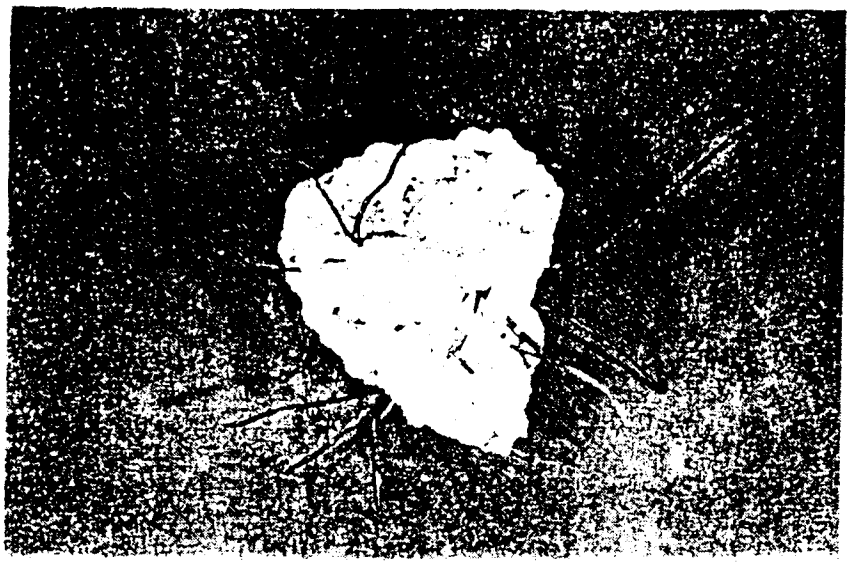

Fig. 25. Sample of used castable

The dried and fired properties of this material are given in Table 2, which shows the high strength attainable.

TABLE 2

Dried and fired properties of 95 per cent alumina castable containing 6 per cent stainless-steel fibres

Property	Dried at 110°C	Fired at 1300°C
Bulk density, t/m^3	2,90	2,70
Cold crushing strength, MP_a	62	31
Permanent linear change, %	-	0,5

Successful furnace campaigns were achieved with the roof design shown schematically in Fig. 26.

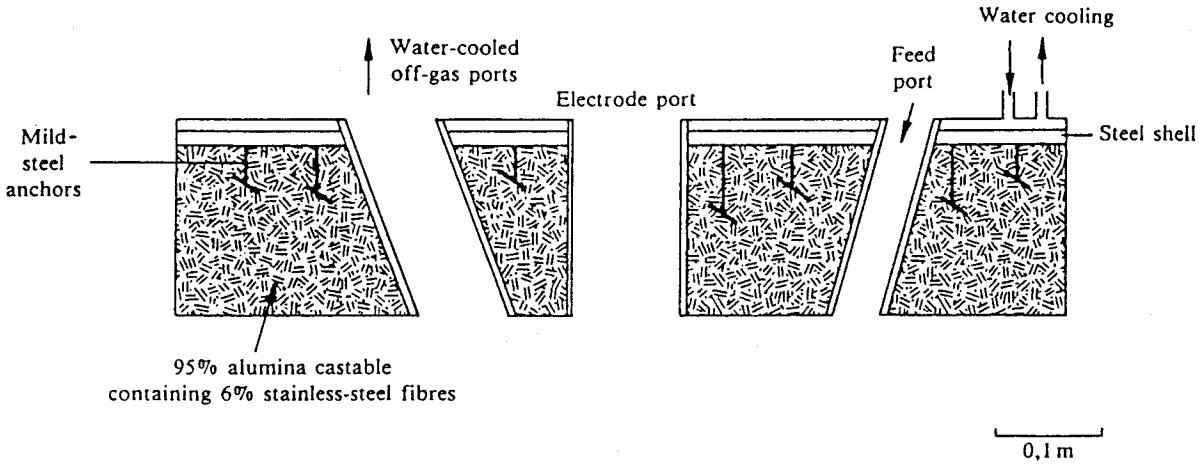

Fig. 26. Schematic representation of water-cooled roof consisting of 95 per cent alumina castable containing 6 per cent stainless-steel fibres

Because of its excellent resistance to damage from thermal shock, the material lends itself to the use of water cooling, the efficiency of which is aided by the use of mild-steel hanger pins (anchors) that also help to maintain the structural integrity. Typical heat losses of 10 to 12 kW to the cooling water were noted for flowrates of 25 to 30 l/min. This was sufficient for the integrity of the fibres to be maintained to within 20 mm of the hot face.

7. CONCLUSIONS

It has been shown that many operational and associated refractory problems that are typical of a.c. open-bath furnaces occur in the d.c. transferred-arc plasma furnace. However, the energy-transfer mechanism to the bath, particularly where long arcs are used can give rise to some problems that are confined to plasma-furnace operation.

Many of the refractory problems have been solved, not by the development of new refractories, but by the modification of existing technology, and by the selection of the refractory as a component of an engineering system rather than by the consideration of its suitability as compared with that of alternative materials.

Thermal-plasma technology is reaching the stage where large-scale pyrometallurgical applications are a reality, and smaller-scale operations have been in use for more than 10 years. One particular gas-reforming process using plasma has been in use for some 40 years. The larger-scale developments, i.e. greater than 10 MW, are for the melting of steel scrap and alloy steels, the smelting of ferro-alloys, and the processing of bag-house dust from steel plants. The refractory work undertaken at Mintek so far has benefited pilot-plant work and industry. It is hoped that this contribution will be of assistance in the further commercial realization of suitable plasma systems for the processing of local materials that are less suited to processing by conventional methods:

8. ACKNOWLEDGEMENTS

This paper is published by permission of the Council for Mineral Technology. The contributions of Messrs H. Lagendijk, B. Tinniswood and B. Waldron, who conducted much of the experimental work on the

refractories, and Messrs K.C. Nicol, M.S. Rennie, W.C.J. Cameron, and B. Groenewald, who assisted with the work relating to control and measurement, are gratefully acknowledged.

REFERENCES

1. FEY, M.G., and MELILLI, W.J. The application of thermal plasma systems to economic scale ironmaking. *PREPRINT, 5th INTERNATIONAL SYMPOSIUM ON PLASMA CHEMISTRY, EDINBURGH, SCOTLAND, AUGUST 1981.* pp. 1-21.

2. ANON. Reduction by plasma metallurgy. *Metall. Plant Technol.*, vol. 5. 1984. p.100.

3. CAMACHO, S.L. Long-column plasma arc torches for pyrometallurgical applications. *PREPRINT, MINTEK 50, SANDTON, SOUTH AFRICA, MARCH 1984.* pp. 1-14.

4. PAGE, D. Some of Tetronics' contributions and achievements in respect of plasma developments. Faringdon, U.K., Tetronics R & D Limited. pp. 1-13.

5. BARCZA, N.A., and STEWART, A.B. The potential of plasma arc technology for the production of ferro-alloys. *PREPRINT INFACON 83, TOKYO.* pp. 1-24.

6. REID, K.J. Plasma metallurgy in the 80's. *PREPRINT, MINTEK 50, SANDTON, SOUTH AFRICA, MARCH 1984.* pp. 1-23.

7. CURR, T.R., *et al.* The design and operation of transferred-arc plasma systems for pyrometallurgical applications. *6th INTERNATIONAL SYMPOSIUM ON PLASMA CHEMSITRY. Boulos, M.I., and Munz, R.J. (eds.).* Sherbrooke (Canada) Universitéde Sherbrooke, 1983. vol. 1, pp. 175-180.

8. STENKVIST, S.E. The high powered graphite cathode d.c. arc plasma-properties and practical applications. *PREPRINT MINTEK 50, SANDTON, SOUTH AFRICA, MARCH 1984.* pp. 1-19.

9. STENKVIST, S.E. A method and device for operating a d.c. arc furnace. *S.A. Patent* 82/8759. Assignee ASEA Aktiebolag, Sweden, 29th Nov. 1982. pp. 1-17.

10. HLAWATSCHEK, H., *et al*. Hearth bottom, more particularly for d.c. arc furnaces. S.A. Patent 85/1301. Assignee: Didier-Werk AG, West Germany, 20th Feb. 1985. pp 1-6.

11. JACKSON, B., and WEBSTER, R. Developments continue in magnesite-carbon refractories for EAF and BOS use. *Iron Steel Int.*, vol. 54, no. 2. Oct. 1981. pp. 67-78.

12. BROWN, A. The properties of ceramic graphite bodies. *Refract. J.*, vol. 58, no. 2. 1983. pp. 7-10.

13. ELSNER, M. New generation of basic carbon-magnesite refractories. *Wiad. Hutn.*, vol. 37, nos. 9-10. 1981. pp. 257-262.

14. NACAMU, R.L., and LALAMA, S.J. Magnesia refractories in basic oxygen steelmaking. *Iron Steelmak.*, vol. 8, no. 5. May 1981. pp. 21-25.

15. SCHOUKENS, A.F.S. Council for Mineral Technology (Mintek), Randburg, Private communication. 1983.

16. BARCZA, N.A., and MOONEY, J.F. The protection of water-cooled plasma-generating devices. *S.A. Patent* 83/1374. Assignee. Council for Mineral Technology, R.S.A., 28th Oct., 1983. pp. 1-16.

17. BARIN, I., and KNACKE, O. Thermochemical properties of inorganic substances. Berlin, Springer-verlag, 1973. pp. 116, 119, 162, 674, 688, 689.